MATRIX

LIFESTYLE TREADMILL

IMPORTANT PRECAUTIONS

SAVE THESE INSTRUCTIONS

When using Matrix exercise equipment, basic precautions should always be followed, including the following: Read all instructions before using this equipment. It is the responsibility of the owner to ensure that all users of this equipment are adequately informed of all warnings and precautions.

This equipment is for indoor use only. This training equipment is a Class S product designed for use in a commercial environment such as a fitness facility.

This equipment is for use only in a climate-controlled room. If your exercise equipment has been exposed to colder temperatures or high moisture climates, it is strongly recommended that this equipment is warmed up to room temperature prior to use.

DANGER!

TO REDUCE THE RISK OF ELECTRICAL SHOCK:

Always unplug the equipment from the electrical outlet before cleaning, performing maintenance and putting on or taking off parts.

WARNING!

TO REDUCE THE RISK OF BURNS, FIRE, ELECTRICAL SHOCK OR INJURY TO PERSONS:

- Use this equipment only for its intended use as described the equipment's Owner's Manual.
- At NO time should children under the age of 14 use the equipment.
- At NO time should pets or children under the age of 14 be closer to the equipment than 10 feet / 3 meters.
- This equipment is not intended for use by persons with reduced physical, sensory or mental capabilities, or lack of experience and knowledge, unless they are supervised or have been given instruction concerning use of the equipment by a person responsible for their safety.
- Always wear athletic shoes while using this equipment. NEVER operate the exercise equipment with bare feet.
- Do not wear any clothing that might catch on any moving parts of this equipment.
- Heart rate monitoring systems may be inaccurate. Over exercising may result in serious injury or death.
- Incorrect or excessive exercise may result in serious injury or death. If you experience any kind of pain, including but not limited to chest pains, nausea, dizziness, or shortness of breath, stop exercising immediately and consult your physician before continuing.
- Do not jump on the equipment.
- At no time should more than one person be on the equipment.
- Set up and operate this equipment on a solid level surface.
- Never operate the equipment if it is not working properly or if it has been damaged.
- Use handlebars to maintain balance when mounting and dismounting, and for additional stability while exercising.
- To avoid injury, do not expose any body parts (for example, fingers, hands, arms or feet) to the drive mechanism or other potentially moving parts of the equipment.
- Connect this exercise product to a properly grounded outlet only.
- This equipment should never be left unattended when plugged in. When not in use, and prior to servicing, cleaning, or moving equipment, turn off power, then unplug from outlet.
- Do not use any equipment that is damaged or has worn or broken parts. Use only replacement parts supplied by Customer Technical Support or an authorized dealer.
- Never operate this equipment if it has been dropped, damaged, or is not working properly, has a damaged cord or plug, is located in a damp or wet environment, or has been immersed in water.
- Keep power cord away from heated surfaces. Do not pull on this power cord or apply any mechanical loads to this cord.
- Do not remove any protective covers unless instructed by Customer Technical Support. Service should only be done by an authorized service technician.
- To prevent electrical shock, never drop or insert any object into any opening.
- Do not operate where aerosol (spray) products are being used or when oxygen is being administered.
- This equipment should not be used by persons weighing more than the specified maximum weight capacity as listed in the equipment Owner's Manual. Failure to comply will void the warranty.
- This equipment must be used in an environment that is both temperature and humidity controlled. Do not use this equipment in locations such as, but not limited to: outdoors, garages, car ports, porches, bathrooms, or located near a swimming pool, hot tub, or steam room. Failure to comply will void the warranty.
- Contact Customer Technical Support or an authorized dealer for examination, repair and/or service.
- Never operate this exercise equipment with the air opening blocked. Keep the air opening and internal components clean, free of lint, hair, and the like.
- Do not modify this exercise device or use unapproved attachments or accessories. Modifications to this equipment or use of unapproved attachments or accessories will void your warranty and may cause injury.
- To clean, wipe surfaces down with soap and slightly damp cloth only; never use solvents. (See MAINTENANCE)
- Use the stationary training equipment in a supervised environment.
- Individual human power to perform exercise may be different than the mechanical power displayed.
- When exercising, always maintain a comfortable and controlled pace.
- To avoid injury, use extreme caution when stepping onto or off of a moving belt. Stand on the siderails when starting the treadmill.
- To avoid injury, attach safety clip to clothing before use.
- Ensure that the edge of the belt is parallel with the lateral position of the side rail and does not move under the side rail. If the belt is not centered, it must be adjusted before use.
- When there is no user on the treadmill (unloaded condition) and when the treadmill is running at 12 km/ hour (7.5 mph), the A-weighted sound pressure level is no greater than 70 dB when sound level is measured at typical head height.
- Noise emission measurement of treadmill under load is higher than with no load.

POWER REQUIREMENTS

CAUTION!

This equipment is for indoor use only. This training equipment is a Class S product designed for use in a commercial environment such as a fitness facility.

1. Do not use this equipment in any location that is not temperature controlled, such as but not limited to garages, porches, pool rooms, bathrooms, car ports or outdoors. Failure to comply may void the warranty.
2. It is essential that this equipment is used only indoors in a climate controlled room. If this equipment has been exposed to colder temperatures or high moisture climates, it is strongly recommended that the equipment is warmed up to room temperature and allowed time to dry out before first time use.
3. Never operate this equipment if it has been dropped, damaged, or is not working properly, has a damaged cord or plug, is located in a damp or wet environment, or has been immersed in water.

DEDICATED CIRCUIT AND ELECTRICAL INFO

Each treadmill must be wired to a dedicated circuit. A dedicated circuit is one that contains only a single electrical outlet per circuit breaker in the breaker box or electrical panel. The easiest way to verify this is to locate the main circuit breaker box or electrical panel and turn off the breaker(s) one at a time. Once a breaker has been turned off, the only thing that should not have power to it is the unit in question. No lamps, vending machines, fans, sound systems, or any other item should lose power when you perform this test.

ELECTRICAL REQUIREMENTS

For your safety and to ensure good treadmill performance, a dedicated ground and dedicated neutral wire must be used on each circuit. A dedicated ground and dedicated neutral means there is a single wire connecting the ground (earth) and neutral wires back to the electrical panel. This means the ground and neutral wires are not shared with other circuits or electrical outlets. Please refer to NEC article 210-21 and 210-23 or your local electrical code for more information. Your treadmill is provided with a power cord with a plug listed below and requires the listed outlet. Any alterations of this power cord could void all warranties of this product.

For units with an integrated TV (like the TOUCH and TOUCH XL), the TV power requirements are included in the unit. An RG6 coaxial cable with ‘F Type’ compression fittings on each end will need to be connected between the cardio unit and the video source. For units with an add-on digital TV (LED only), the machine in which the add-on digital TV is connected to powers the add-on digital TV. Additional power requirements are not needed for the add-on digital TV.

120 VAC UNITS

Units require 100-125 VAC, 60 Hz on a dedicated 20A circuit with dedicated neutral and dedicated ground connections. This outlet should have the same configuration as the plug supplied with the unit. No adapter should be used with this product.

220-240 VAC UNITS

Units require 216-250VAC at 50-60 Hz and 16A dedicated circuit with dedicated neutral and dedicated ground connections. This outlet should be the locally appropriate electrical socket for the ratings above and have the same configuration as the plug supplied with the unit. No adapter should be used with this product.

GROUNDING INSTRUCTIONS

The equipment must be grounded. If it should malfunction or breakdown, grounding provides a path of least resistance for electric current to reduce the risk of electric shock. The unit is equipped with a cord having an equipment-grounding conductor and a grounding plug. The plug must be plugged into an appropriate outlet that is properly installed and grounded in accordance with all local codes and ordinances. If the user does not follow these grounding instructions, the user could void the MATRIX limited warranty.

ADDITIONAL ELECTRICAL INFO

In addition to the dedicated circuit requirement, the proper gauge wire must be used from the breaker box or electrical panel to the outlet. For example, a 120 VAC treadmill with an electrical outlet greater than 100 feet from the breaker box should have the wire size increased to 10 AWG or more to accommodate voltage drops seen in long wire runs. Please see the local electrical code for more information.

ENERGY SAVING / LOW-POWER MODE

All units are configured with the ability to enter into an energy saving / low-power mode when the unit has not been in use for a specified period of time. Additional time may be required to fully reactivate this unit once it has entered the low-power mode. This energy saving feature may be enabled or disabled from within the ‘Manager Mode’.

ADD-ON DIGITAL TV (LED, PREMIUM LED)

Additional power requirements are not needed for the add-on digital TV. An RG6 coaxial cable with ‘F Type’ compression fittings will need to be connected between the video source and each add-on digital TV unit.

DANGER

Improper connection of the equipment-grounding conductor can result in a risk of electric shock. Check with a qualified electrician or serviceman if you are in doubt as to whether the product is properly grounded. Do not modify the plug provided with the product. If it will not fit the outlet, have a proper outlet installed by a qualified electrician.

FCC REGULATIONS (USA ONLY)

This equipment has been tested and found to comply with the limits for a Class B digital device, pursuant to part 15 of the FCC rules. These limits are designed to provide reasonable protection against harmful interference in a residential installation. This equipment generates, uses and can radiate radio frequency energy and, if not installed and used in accordance with the instructions, may cause harmful interference to radio communications. However, there is no guarantee that interference will not occur in a particular installation. If this equipment does cause harmful interference to radio or television reception, which can be determined by turning the equipment off and on, the user is encouraged to try to correct the interference by one or more of the following measures:

- Reorient or relocate the receiving antenna.
- Increase the separation between the equipment and receiver.
- Connect the equipment into an outlet on a circuit different from that to which the receiver is connected.
- Consult the dealer or an experienced radio/TV technician for help.

FCC RF Radiation Exposure Statement:

1. This Transmitter must not be co-located or operating in conjunction with any other antenna or transmitter.
2. This equipment complies with FCC RF radiation exposure limits set forth for an uncontrolled environment. This equipment should be installed and operated with a minimum distance of 20 centimeters between the radiator and your body.

ASSEMBLY

UNPACKING

Unpack the equipment where you will be using it. Place the carton on a level flat surface. It is recommended that you place a protective covering on your floor. Never open box when it is on its side.

IMPORTANT NOTES

During each assembly step, ensure that ALL nuts and bolts are in place and partially threaded.

Several parts have been pre-lubricated to aid in assembly and usage. Please do not wipe this off. If you have difficulty, a light application of lithium grease is recommended.

WARNING!

There are several areas during the assembly process that special attention must be paid. It is very important to follow the assembly instructions correctly and to make sure all parts are firmly tightened. If the assembly instructions are not followed correctly, the equipment could have parts that are not tightened and will seem loose and may cause irritating noises. To prevent damage to the equipment, the assembly instructions must be reviewed and corrective actions should be taken.

NEED HELP?

If you have questions or if there are any missing parts, contact Customer Tech Support. Contact information is located on the information card.

TOOLS REQUIRED:

- ☐ 8mm T-Wrench
- ☐ 5mm Allen Wrench
- ☐ 6mm Allen Wrench
- ☐ Phillips Screwdriver

PARTS INCLUDED:

- ☐ 1 Base Frame
- ☐ 2 Console Masts
- ☐ 1 Console Base Set
- ☐ 4 Console Mast Covers
- ☐ 1 Console Rear Cover
- ☐ 1 Grip Set
- ☐ 2 Handlebar Covers
- ☐ 1 Power Cord
- ☐ 1 Hardware Kit
- ☐ 1 Zip Tie

Console sold separately

ASSEMBLY

1	Hardware	Qty
A	Bolt	8
B	Spring Washer	8
C	Flat Washer	8

Do not tighten bolts until step 3 is complete.

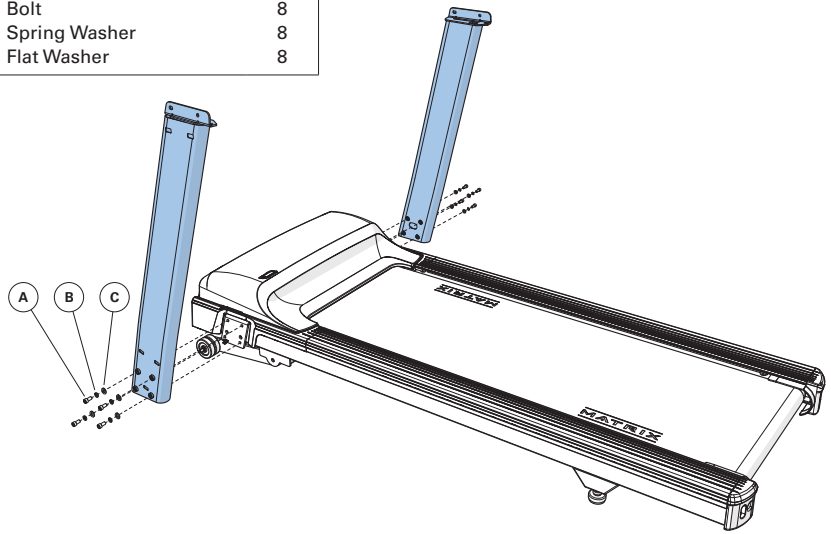

2	Hardware	Qty
D	Bolt	6
C	Flat Washer	6

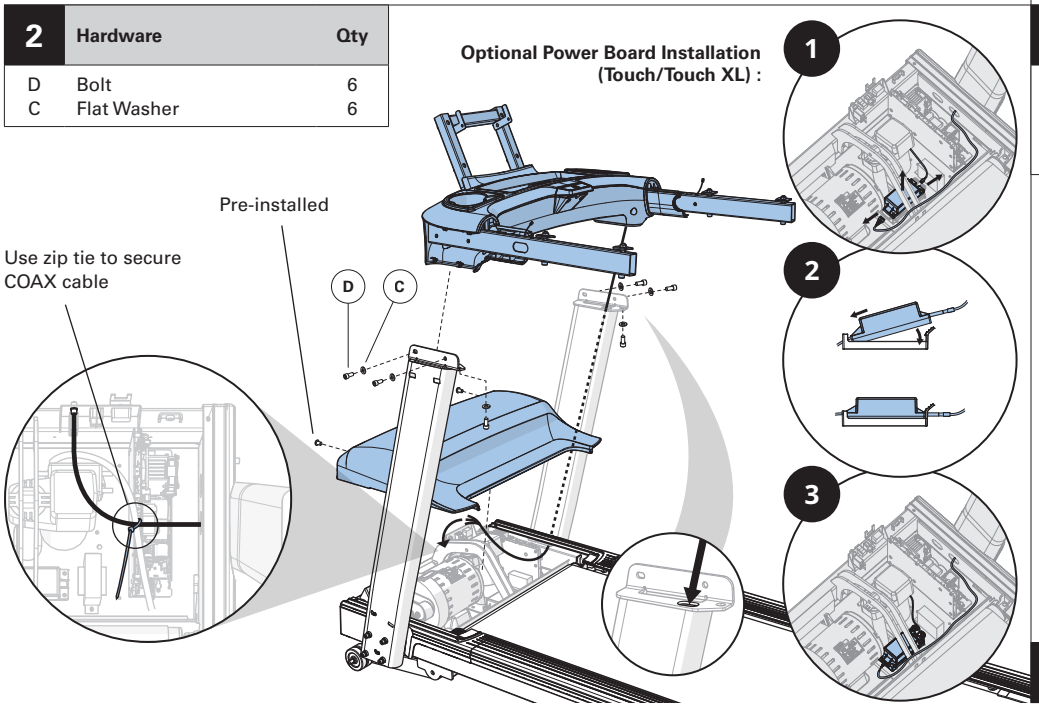

3	Hardware	Qty
E	Bolt	6
C	Flat Washer	6

Tighten all bolts from steps 1–3.

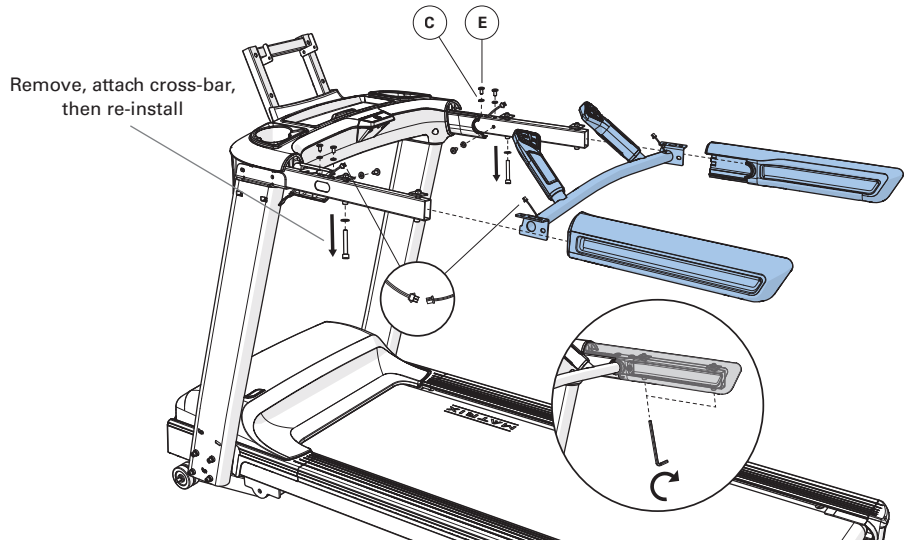

4	Hardware	Qty
F	Bolt	4
G	Flat Washer	4
H	Screw (20mm)	2
I	Screw (10mm)	1

1 MCB Communication
2 Extension Power Wire
3 Ethernet
4 Coax
5 Ground Wire
6 Emergency Stop
7 Console Connect Wires

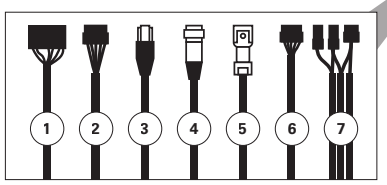

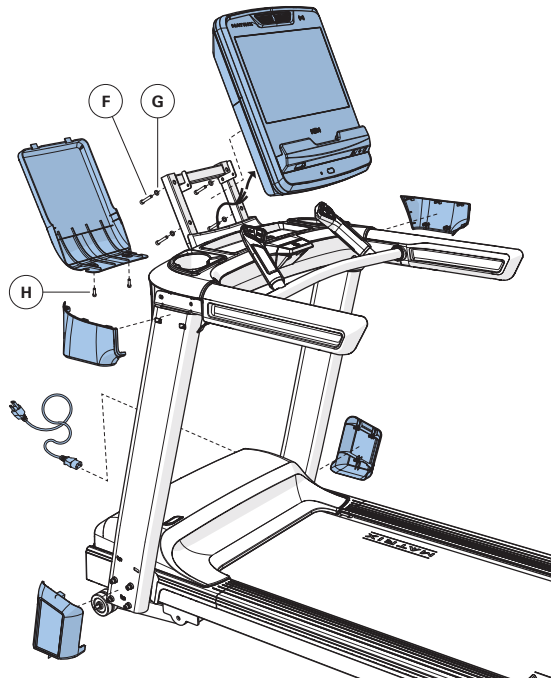

ASSEMBLY COMPLETE

OPTIONAL HANDRAIL KIT ASSEMBLY

1	Hardware	Qty
A	Remove	4
B	Save for step 2	4

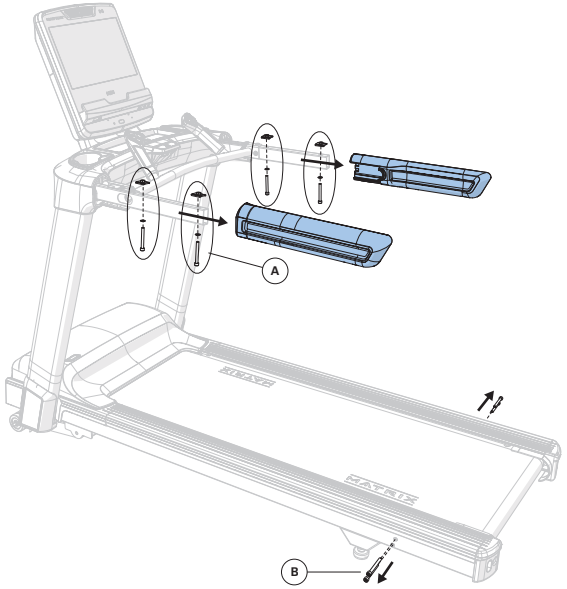

2	Hardware	Qty
B	Bolt (from step 1)	4
C	Bolt (M8x65-20L)	4
D	Spring Washer (M8)	8

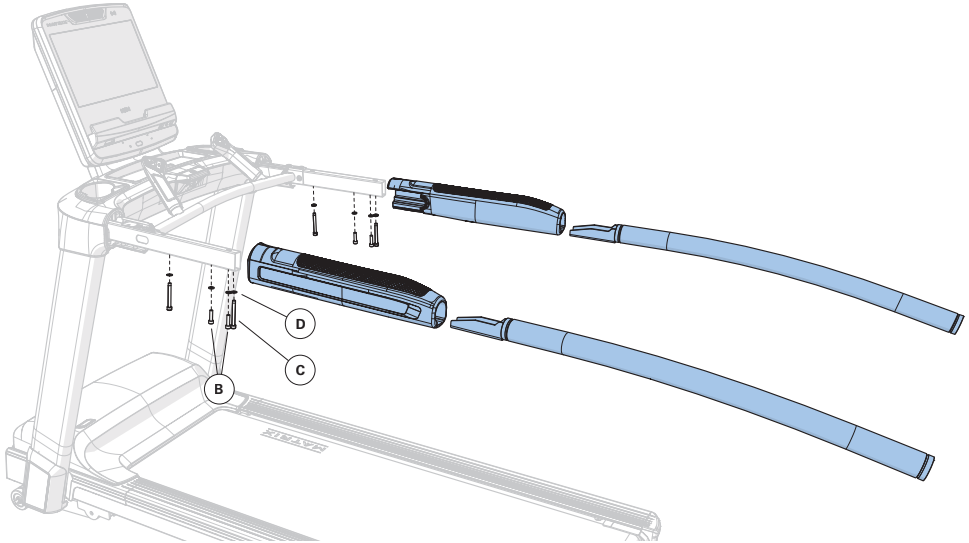

3	Hardware	Qty
E	Bolt (M8x70-30L)	4
F	Bolt (M10x100-35L)	2
G	Spring Washer (M10)	2

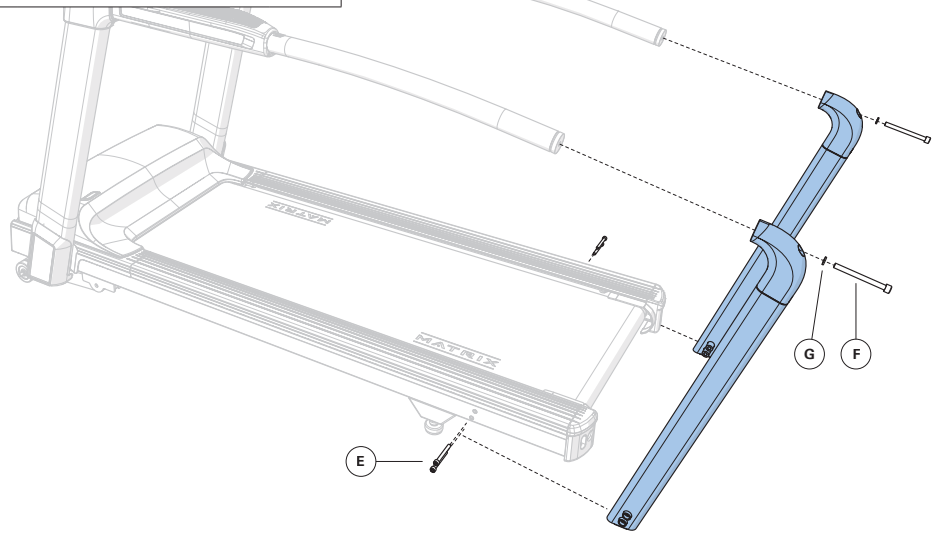

4

ASSEMBLY COMPLETE

BEFORE YOU BEGIN

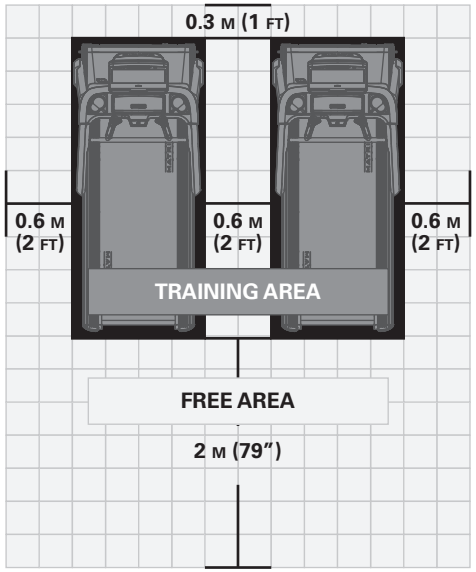

WARNING!

Our equipment is heavy, use care and additional help if necessary when moving.
Failure to follow these instructions could result in injury.

LOCATION OF THE UNIT

Ensure that there is a clear zone behind the treadmill that is at least the width of the treadmill and at least 2 meters (at least 79") long. This clear zone is important to reduce the risk of serious injury were a user to fall off the back edge of the treadmill. This zone must be clear of any obstruction and provide the user a clear exit path from the machine.

For ease of access, there should be an accessible space on both sides of the treadmill of at least 24" (0.6 meters) to allow a user access to the treadmill from either side. Do not place the treadmill in any area that will block any vent or air openings.

Locate the equipment away from direct sunlight. The intense UV light can cause discoloration on the plastics. Locate the equipment in an area with cool temperatures and low humidity. The treadmill should not be located outdoors, near water, or in any environment that is not temperature and humidity controlled (such as in a garage, covered patio, etc.).

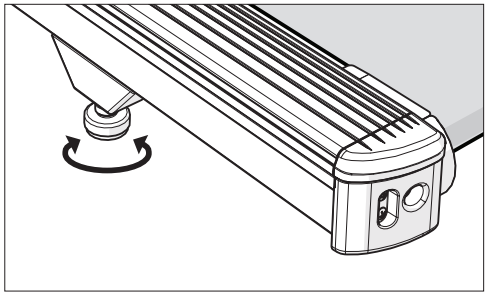

LEVELING THE EQUIPMENT

Install equipment on a stable and level floor. It is extremely important that the levelers are correctly adjusted for proper operation. Turn leveling foot clockwise to lower and counter-clockwise to raise unit. Adjust each side as needed until the equipment is level. An unbalanced unit may cause belt misalignment or other issues. Use of a level is recommended.

BEFORE YOU BEGIN

TENSIONING THE RUNNING BELT

After placing the treadmill in the position it will be used, the belt must be checked for proper tension and centering. The belt might need to be adjusted after the first two hours of use. Temperature, humidity, and use cause the belt to stretch at different rates. If the belt starts to slip when a user is on it, be sure to follow the directions below.

1) Locate the two hex head bolts on the rear of the treadmill. The bolts are located at each end of the frame at the back of the treadmill. These bolts adjust the rear belt roller. Do not adjust until the treadmill is on. This will prevent over tightening of one side.
2) The belt should have equal distance on either side between the frame. If the belt is touching one side, do not start the treadmill. Turn the bolts counter clockwise approximately one full turn on each side. Manually center the belt by pushing the belt from side to side until it is parallel with the side rails. Tighten the bolts the same amount as when the user loosened them, approximately one full turn. Inspect the belt for damage.
3) Start the treadmill running belt by pressing the GO buttion. Increase speed to 3 mph (~4.8 kph) and observe the belt position. If it is moving to the right, tighten the right bolt by turning it clockwise ¼ turn, and loosen the left bolt ¼ turn. If it is moving to the left, tighten the left bolt by turning it clockwise ¼ turn and loosen the right ¼ turn. Repeat Step 3 until the belt remains centered for several minutes.
4) Check the tension of the belt. The belt should be very snug. When a person walks or runs on the belt, it should not hesitate or slip. If this occurs, tighten the belt by turning both bolts clockwise ¼ turn. Repeat if necessary.

NOTE: Use the orange strip in the lateral position of the side rails as criteria to confirm the belt is properly centered. It is necessary to adjust the belt until the edge of the belt is parallel to the orange or white strip.

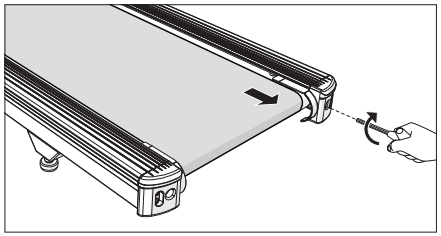

TIGHTENS RIGHT SIDE OF ROLLER

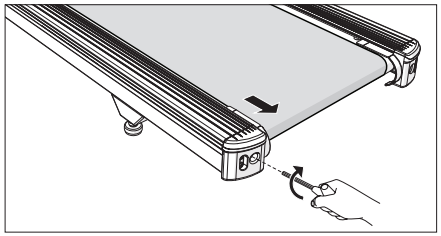

TIGHTENS LEFT SIDE OF ROLLER

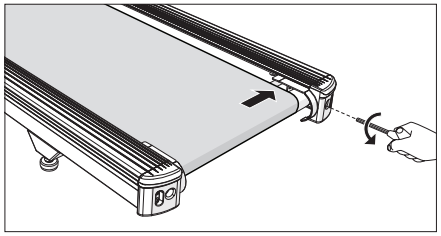

BELT IS TOO FAR TO THE LEFT SIDE

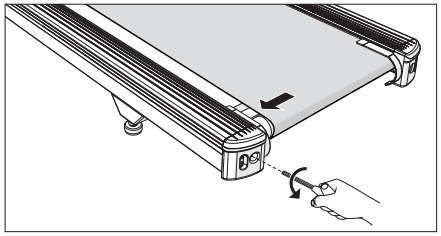

BELT IS TOO FAR TO THE RIGHT SIDE

WARNING!

Do not run belt faster than 3 mph (~4.8 kph) while centering. Keep fingers, hair and clothing away from belt at all times.

Treadmills equipped with side handrails and front handlebar for user support and emergency dismount, press emergency button to stop the machine for emergency dismount.

PRODUCT SPECIFICATIONS

	LIFESTYLE			
CONSOLE	TOUCH XL	TOUCH	PREMIUM LED	LED / GROUP TRAINING LED
Max User Weight	182 kg / 400 lbs			
Product Weight	150.9 kg / 332.7 lbs	148 kg / 326.3 lbs	146.2 kg / 322.4 lbs	145.5 kg / 320.8 lbs
Shipping Weight	182.6 kg / 402.6 lbs	178 kg / 392.4 lbs	176.2 kg / 388.5 lbs	175.5 kg / 386.9 lbs
Overall Dimensions (L x W x H)*	201.1 x 90.4 x 170.8 cm / 79.2″ x 35.6″ x 67.2″	201.1 x 90.4 x 164.2 cm / 79.2″ x 35.6″ x 64.6″	201.1 x 90.4 x 164.2 cm / 79.2″ x 35.6″ x 64.6″	201.1 x 90.4 x 164.2 cm / 79.2″ x 35.6″ x 64.6″

* Ensure a minimum clearance width of 0.6 meters (24″) for access to and passage around MATRIX equipment. Please note, 0.91 meters (36″) is the ADA recommended clearance width for individuals in wheelchairs.

BEFORE YOU BEGIN

INTENDED USE

- Treadmill is intended for walking, jogging, or running exercises only.
- Always wear athletic shoes while using this equipment.
- Risk of personal injury – To avoid injury, attach safety clip to clothing before use.
- To avoid injury, use extreme caution when stepping onto or off of a moving belt. Stand on the siderails when starting the treadmill.
- Face toward the treadmill controls (toward the front of the treadmill) when the treadmill is in operation. Keep your body and head facing forward. Do not attempt to turn around or look backwards while the treadmill is running.
- Always maintain control while operating the treadmill. If you ever feel as if you are unable to remain in control, grasp handlebars for support and step onto the non-moving side rails, then bring moving treadmill surface to a stop prior to dismounting.
- Wait for moving surface of treadmill to come to a complete stop before dismounting from the treadmill.
- Stop your workout immediately if you feel pain, faint, dizzy or are short of breath.

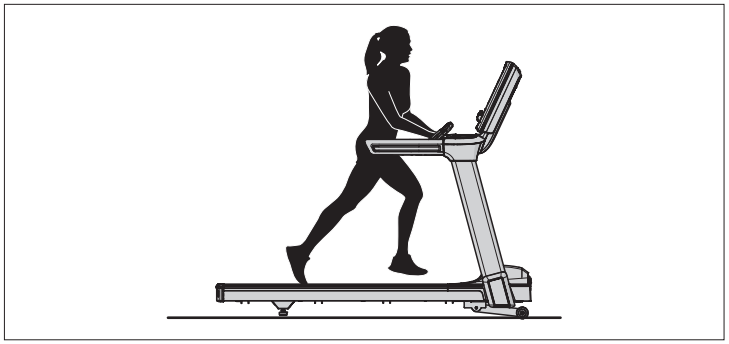

PROPER USAGE

Position your feet on the belt, bend your arms slightly and grasp the heart rate sensors (as shown). While running, your feet should be located in the center of the belt so that your hands can swing naturally and without contacting the front handlebars.

This treadmill is capable of reaching high speeds. Always start off using a slower speed and adjust the speed in small increments to reach a higher speed level. Never leave the treadmill unattended while it is running.

CAUTION!

RISK OF INJURY TO PERSONS

While you are preparing to use the treadmill, do not stand on the belt. Place your feet on the side rails before starting the treadmill. Start walking on the belt only after the belt has begun to move. Never start the treadmill at a fast running speed and attempt to jump on! In case of an emergency, place both hands on the side arm rests to hold yourself up and place your feet onto the side rails.

USING THE SAFETY STOP

Your treadmill will not start unless the emergency stop button is reset. Attach the clip end securely to your clothing. This safety stop is designed to cut the power to the treadmill if you should fall. Check the operation of the safety stop every 2 weeks.

WARNING!

Never use the treadmill without securing the safety clip to your clothing. Pull on the safety key clip first to make sure it will not come off your clothing.

USING THE HEART RATE FUNCTION

The heart rate function on this product is not a medical device. While heart rate grips can provide a relative estimation of your actual heart rate, they should not be relied on when accurate readings are necessary. Some people, including those in a cardiac rehab program, may benefit from using an alternate heart rate monitoring system like a chest or wrist strap. Various factors, including movement of the user, may affect the accuracy of your heart rate reading. The heart rate reading is intended only as an exercise aid in determining heart rate trends in general. Please consult your physician.

Place the palm of your hands directly on the grip pulse handlebars. Both hands must grip the bars for your heart rate to register. It takes 5 consecutive heart beats (15-20 seconds) for your heart rate to register. When gripping the pulse handlebars, do not grip tightly. Holding the grips tightly may elevate your blood pressure. Keep a loose, cupping hold. You may experience an erratic readout if consistently holding the grip pulse handlebars. Make sure to clean the pulse sensors to ensure proper contact can be maintained.

WARNING!

Heart rate monitoring systems may be inaccurate. Over exercising may result in serious injury or death. If you feel faint, stop exercising immediately.

MAINTENANCE

1) Any and all part removal or replacement must be performed by a qualified service technician.
2) DO NOT use any equipment that is damaged and or has worn or broken parts. Use only replacement parts supplied by your country's local MATRIX dealer.
3) MAINTAIN LABELS AND NAMEPLATES: Do not remove labels for any reason. They contain important information. If unreadable or missing, contact your MATRIX dealer for a replacement.
4) MAINTAIN ALL EQUIPMENT: The safety level of the equipment can be maintained only if the equipment is examined regularly for damage or wear. Preventative maintenance is the key to the smooth operation of equipment as well as keeping liability to a minimum. Equipment needs to be inspected at regular intervals. If signs of damage or wear are found, remove equipment from service. Have a service technician inspect and repair the equipment prior to putting the equipment back into service.
5) Ensure that any person(s) making adjustments or performing maintenance or repair of any kind is qualified to do so. MATRIX dealers will provide service and maintenance training at our corporate facility upon request.

WARNING!

To remove power from the unit, the power cord must be disconnected from the wall outlet.

RECOMMENDED CLEANING TIPS

Preventative maintenance and daily cleaning will prolong the life and look of your equipment.

- Use a soft, clean cotton cloth. DO NOT use paper towels to clean surfaces on the treadmill. Paper towels are abrasive and can damage surfaces.
- Use a mild soap and damp cloth. DO NOT use ammonia based cleaner or alcohol. This will cause discoloring of the aluminum and plastics it comes into contact with.
- Do not pour water or cleaning solutions on any surface. This could cause electrocution.
- Wipe the console, heart rate grip, handles and side rails after each use.
- Brush away any wax deposits from the deck and belt area. This is a common occurrence until the wax is worked into the belt material.
- Be sure to remove any obstructions from the path of the elevation wheels including power cords.
- For cleaning touch screen displays, use distilled water in an atomizer spray bottle. Spray distilled water onto soft, clean, dry cloth and wipe display until clean and dry. For very dirty displays, adding vinegar is recommended.

CAUTION!

Be sure to have proper assistance to install and move the unit in order to avoid injury or damage to the treadmill.

MAINTENANCE SCHEDULE

ACTION	FREQUENCY
Unplug the unit. Clean entire machine using water and a mild soap or other MATRIX approved solution (cleaning agents should be alcohol and ammonia free).	DAILY
Inspect the power cord. If the power cord is damaged, contact Customer Tech Support.	DAILY
Make sure the power cord is not underneath the unit or in any other area where it can become pinched or cut during storage or use.	DAILY
Unplug the treadmill and remove the motor cover. Check for debris and clean with a dry cloth or small vacuum nozzle. **WARNING**: Do not plug the treadmill in until the motor cover has been reinstalled.	MONTHLY

DECK AND BELT REPLACEMENT

One of the most common wear and tear items on a treadmill is the deck and belt combination. If these two items are not properly maintained they can cause damage to other components. This product has been provided with the most advanced maintenance free lubricating system on the market.

WARNING: Do not run the treadmill while cleaning the belt and deck. This can cause serious injury and can damage the machine.

Maintain the belt and deck by wiping the sides of the belt and deck with a clean cloth. The user can also wipe under the belt 2 inches (~51mm) on both sides removing any dust or debris.

The deck can be flipped and reinstalled or replaced by an authorized service technician. Please contact MATRIX for more information.

MATRIX

© 2021 Johnson Health Tech

Rev 1.6 A