MATRIX

CXP

IMPORTANT PRECAUTIONS

SAVE THESE INSTRUCTIONS

- When using Matrix Cycles, basic precautions should always be followed, including the following: Read all instructions before using this equipment. It is the responsibility of the owner to ensure that all users of this equipment are adequately informed of all warnings and precautions.
- This equipment is intended for commercial use. To ensure your safety and protect the equipment, read all instructions before operating.

WARNING!

TO REDUCE THE RISK OF BURNS, FIRE, ELECTRICAL SHOCK OR INJURY TO PERSONS:

- Use this indoor cycle for its intended purpose as described in this manual. Do not use attachments that have not been recommended by the manufacturer.
- Never operate the indoor cycle if it is not working properly, or if it has been damaged. Contact Customer Tech Support or the authorized dealers for examination and repair.
- Do not use the indoor cycle without proper footwear. NEVER operate the indoor cycle with bare feet.
- Do not wear any clothing that might catch on any moving parts of this indoor cycle.
- Keep hands and feet clear at all times from moving parts to avoid injury. Never turn the pedal cranks by hand.
- Do not dismount the indoor cycle until the pedals are at a complete STOP.
- Do not insert any object, hands or feet into any openings, or expose hands, arms or feet to the drive mechanism or other potentially moving part of the indoor cycle.
- Do not use any equipment that is damaged or has worn or broken parts. Use only replacement parts supplied by Customer Tech Support or the authorized dealers.
- Do not operate where aerosol (spray) products are being used or when oxygen is being administered.
- Close supervision is necessary when used near children.
- This equipment is not intended for use by persons with reduced physical, sensory or mental capabilities, or lack of experience and knowledge, unless they have been given supervision or instruction concerning use of the equipment by a person responsible for their safety.
- Ensure that adjustment levers (seat and handlebar fore-and-aft) are properly secured and do not interfere with range of motion during exercise.
- When adjusting the seat and handlebar height, hold the seat or handlebar with one hand, while lifting and then locking the lever. Ensure clamp is fully engaged prior to use.
- Incorrect or excessive exercise may result in serious injury or death. If you experience any kind of pain, including but not limited to chest pains, nausea, dizziness, or shortness of breath, stop exercising immediately and consult your physician before continuing.
- Do not jump on the unit.
- At no time should more than one person be on unit while in operation.
- This unit should not be used by persons weighing more than specified in the PRODUCT SPECIFICATIONS SECTION. Failure to comply will void the warranty.
- Do not use other attachments that are not recommended by the manufacturer. Attachments may cause injury.
- To clean, wipe surfaces down with soap and slightly damp cloth only; never use solvents. (See MAINTENANCE)
- At NO time should pets or children under the age of 14 be closer to the unit than 10 feet.
- At NO time should children under the age of 14 use the unit.
- Children over the age of 14 should not use the unit without adult supervision.
- Heart rate monitoring systems may be inaccurate.
- After exercising, push down on the brake lever to slow the flywheel down and decrease the potential for injury.
- The indoor cycle does not have a independently moving flywheel; the pedals will continue to move together with the flywheel until the flywheel stops.
- Use the stationary training equipment in a supervised environment.

CAUTION!

CONSULT A PHYSICIAN BEFORE USING THIS EQUIPMENT. READ OWNER'S MANUAL BEFORE USE.

- It is essential that this equipment is used only indoors, in a climate controlled room. If this equipment has been exposed to colder temperatures or high moisture climates, it is strongly recommended that the equipment is warmed up to room temperature and allowed time to dry out before first time use.

ASSEMBLY

UNPACKING

Unpack the equipment where you will be using it. Place the carton on a level flat surface. It is recommended that you place a protective covering on your floor. Never open box when it is on its side.

IMPORTANT NOTES

During each assembly step, ensure that ALL nuts and bolts are in place and partially threaded.

Several parts have been pre-lubricated to aid in assembly and usage. Please do not wipe this off. If you have difficulty, a light application of lithium grease is recommended.

WARNING!

There are several areas during the assembly process that special attention must be paid. It is very important to follow the assembly instructions correctly and to make sure all parts are firmly tightened. If the assembly instructions are not followed correctly, the equipment could have parts that are not tightened and will seem loose and may cause irritating noises. To prevent damage to the equipment, the assembly instructions must be reviewed and corrective actions should be taken.

NEED HELP?

If you have questions or if there are any missing parts, contact Customer Tech Support. Contact information is located on the information card.

TOOLS REQUIRED:

- ☐ 3 mm Allen Wrench
- ☐ 5 mm Allen Wrench
- ☐ 10 mm Allen Wrench
- ☐ Flat Wrench (15mm/17mm 325L)
- ☐ Phillips Screwdriver

PARTS INCLUDED:

- ☐ 1 Main Frame
- ☐ 1 Front Stabilizer Tube
- ☐ 1 Rear Stabilizer Tube
- ☐ 1 Handlebar Set
- ☐ 1 Transport Handle
- ☐ 1 Bicycle Saddle
- ☐ 2 Pedals
- ☐ 1 Console
- ☐ 1 Hardware Kit

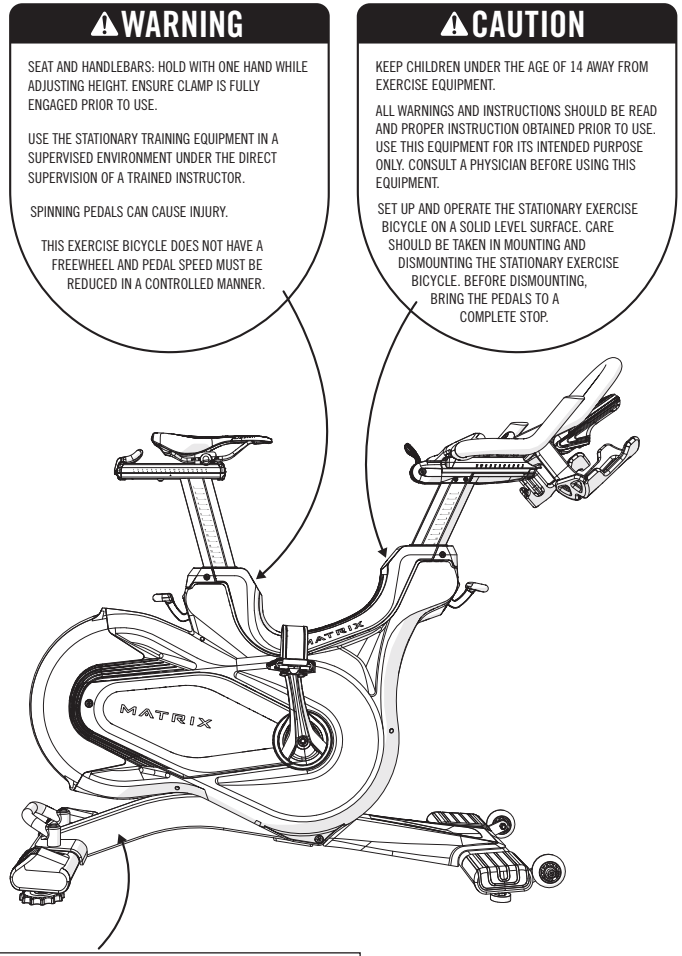

SERIAL NUMBER

MODEL: CXP MATRIX TARGET TRAINING CYCLE

* Use the information above when calling for service.

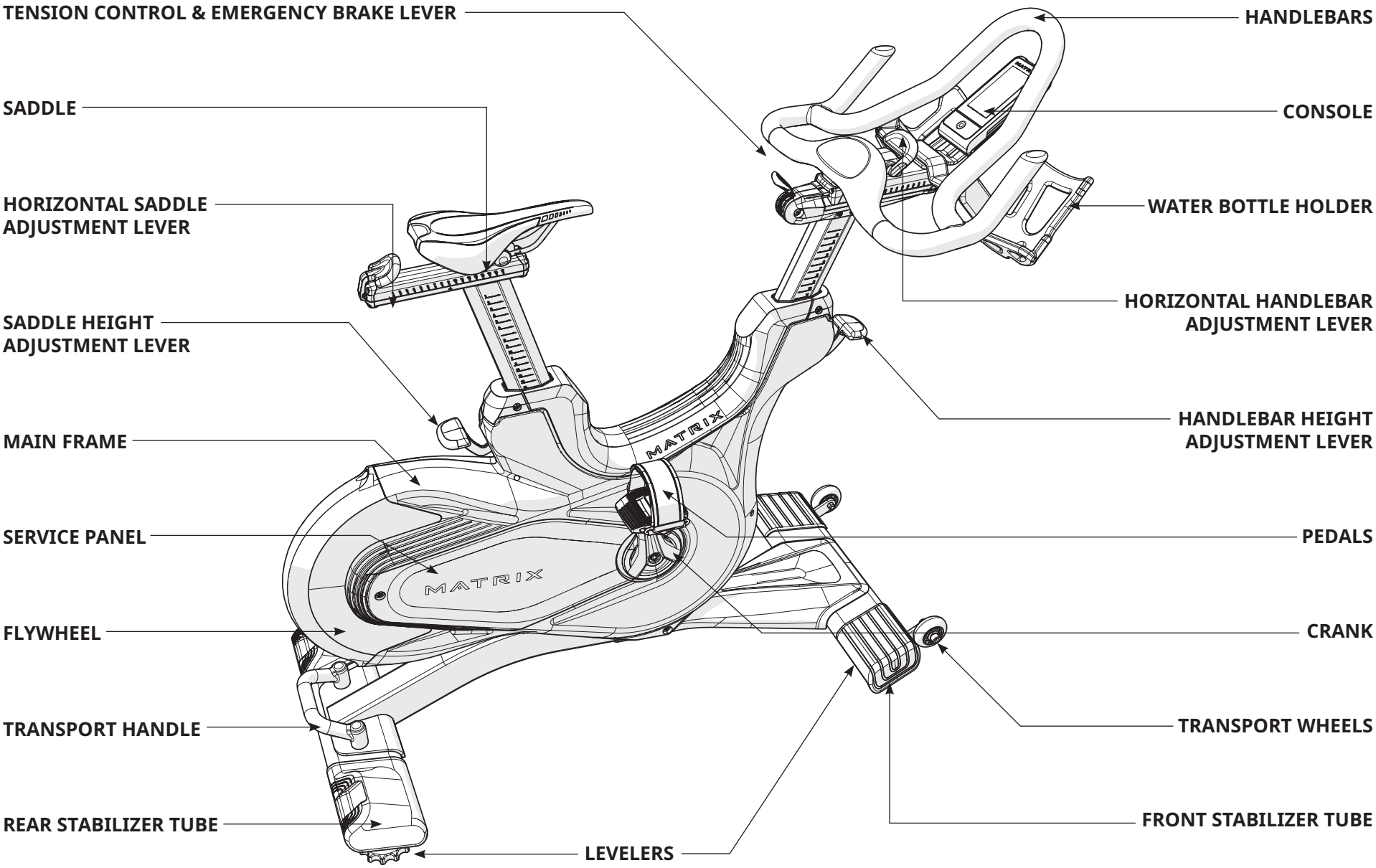
TENSION CONTROL & EMERGENCY BRAKE LEVER
SADDLE
HORIZONTAL SADDLE ADJUSTMENT LEVER
SADDLE HEIGHT ADJUSTMENT LEVER
MAIN FRAME
SERVICE PANEL
FLYWHEEL
TRANSPORT HANDLE
REAR STABILIZER TUBE
LEVELERS
HANDLEBARS
CONSOLE
WATER BOTTLE HOLDER
HORIZONTAL HANDLEBAR ADJUSTMENT LEVER
HANDLEBAR HEIGHT ADJUSTMENT LEVER
PEDALS
CRANK
TRANSPORT WHEELS
FRONT STABILIZER TUBE
MATRIX
MATRIX

ENGLISH

1

Red Hardware Pack

	Description	Qty
A	Bolt (M12x25L)	2
B	Flat Washer	4
C	Bolt (M12x70L)	2

Torque Value

A	78 Nm / 58 ft-lb
C	78 Nm / 58 ft-lb

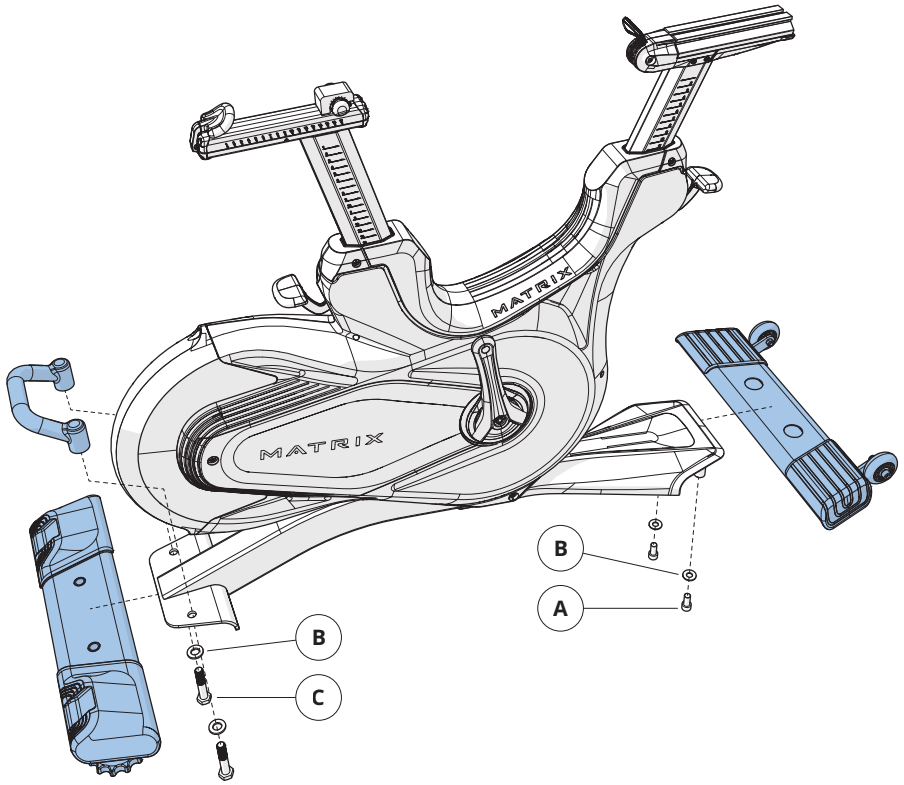

2

Yellow Hardware Pack

	Description	Qty
D	Stopper	1
E	Screw (M8x20L)	1
F	Screw (M4x6L)	2

Torque Value

E	20 Nm / 14 ft-lb

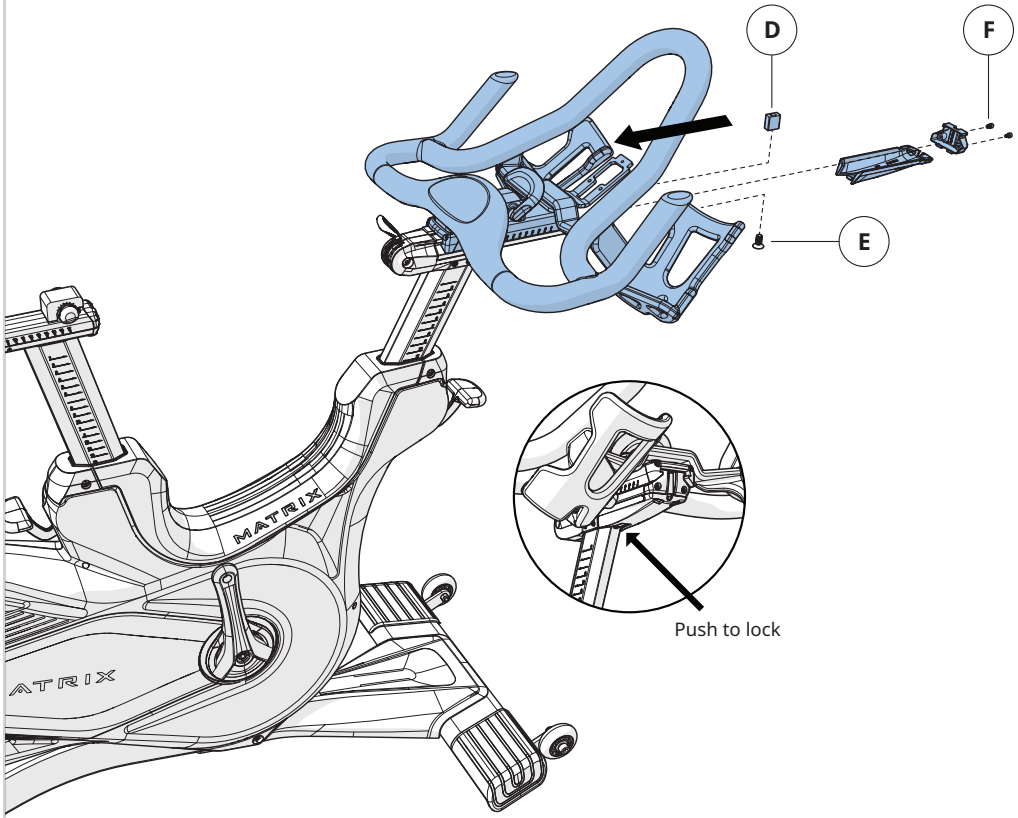

3

Pre-installed Hardware

	Description	Qty
G	Bolt (M6x50L)	1

Torque Value

100 Nm / 74 ft-lb

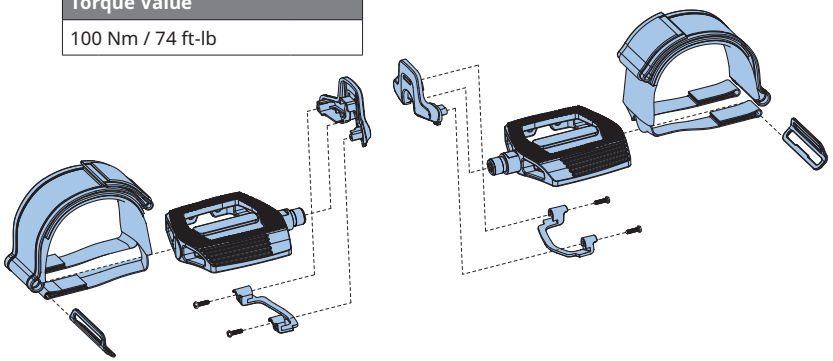

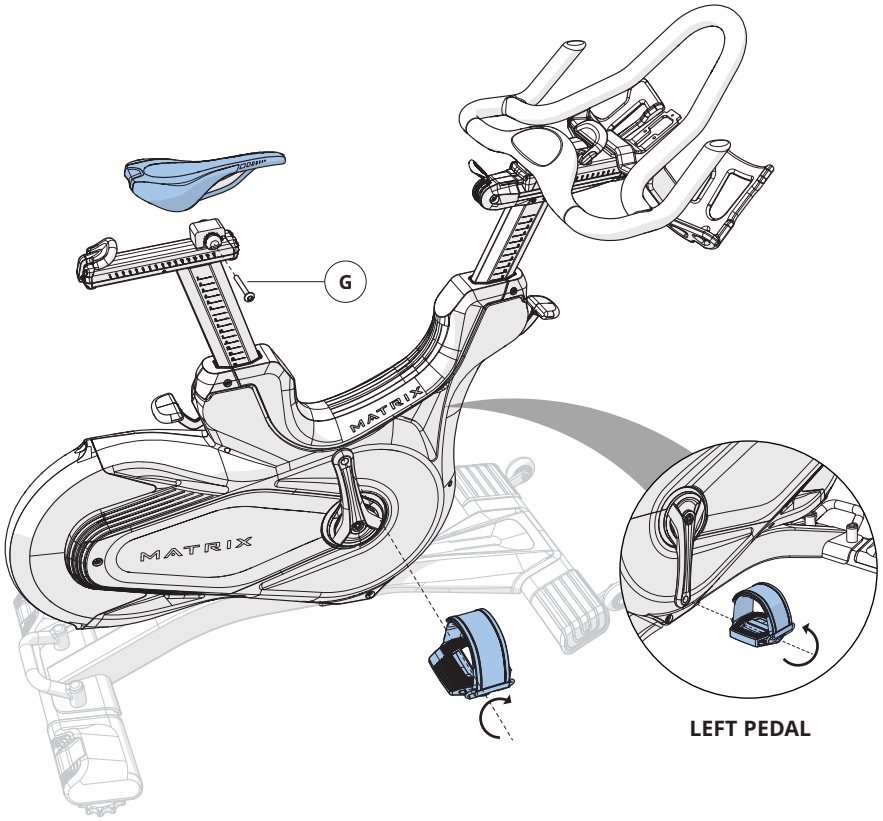

4

Green Hardware Pack

	Description	Qty
H	Screw (M4x10L)	3

ASSEMBLY COMPLETE!

ENGLISH

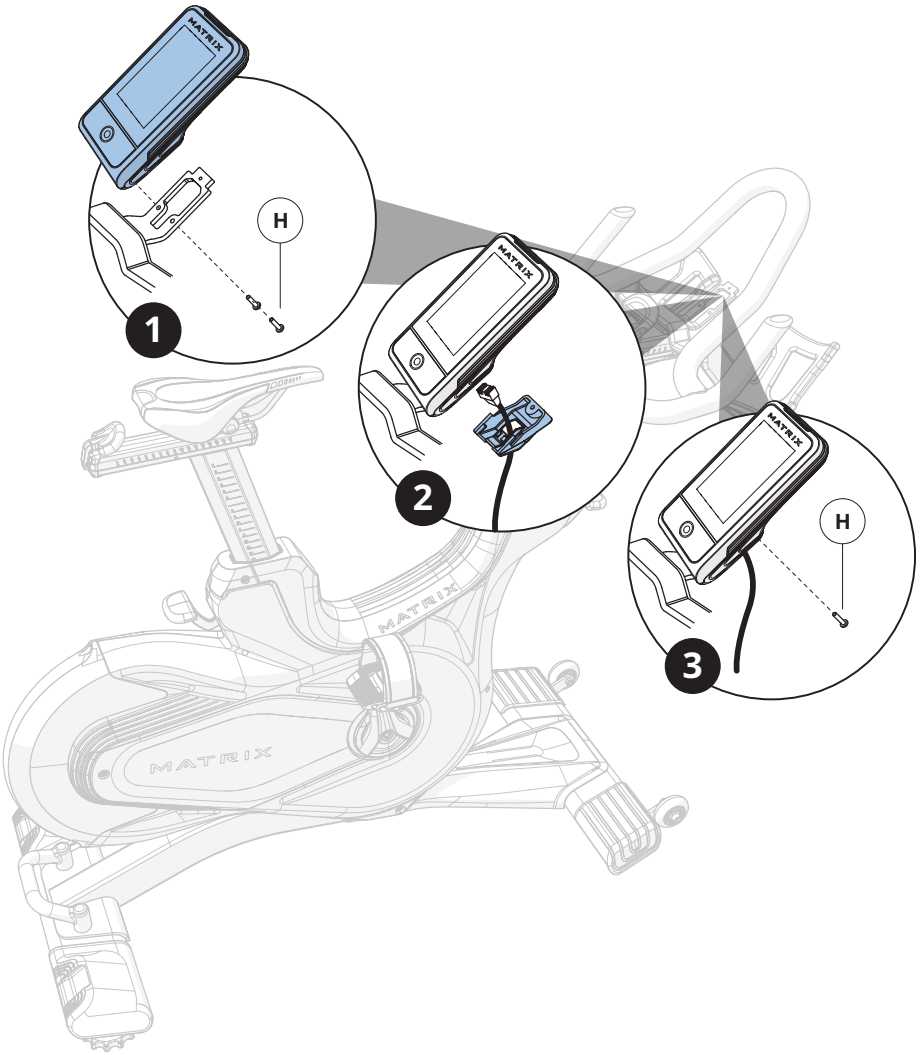

HOME SCREEN

RUN SCREEN (RPM)

B D G C H E I J F A

CONSOLE OPERATION

The CXP has a fully integrated touch screen display. All information required for workouts is explained on screen. Exploration of the interface is highly encouraged.

A) POWER BUTTON: Press to wake display/power on. Press and hold for 3 seconds to put display to sleep. Press and hold for 10 seconds to power off.

B) LANGUAGE SELECTION

C) CLOCK

D) MENU: Touch to access various functions before or during your workout.

E) WORKOUTS: Touch to access a variety of target training options or preset workouts.

F) SIGN IN: Touch to sign in using your XID (WiFi is an optional add-on feature).

G) CURRENT SCREEN: Displays what screen you are currently viewing.

H) FEEDBACK WINDOWS: Displays Time, RPM, Watts, Average Watts, Speed, Heart Rate (BPM), Level, Pace, Distance or Calories. Feedback varies based on current screen.

I) CHANGE SCREEN: Swipe display left or right to cycle between 6 different run screen options. Or select a metric with an orange triangle to go straight to a desired screen.

J) TARGET TRAINING SCREEN: Press to return to target training screen when a target training options has been set. Press the target icon to set a specific training goal and activate the LED color wrap.

- **PERSONAL INFO:** Enter weight, age and gender to ensure caloric data and the power-to-weight ratio is more accurate.
- **BATTERY:** Battery level is shown at the bottom of the MENU screen. Pedaling can wake/power on the console. Pedaling at a rate above 77 RPM will charge the battery.

HOME SCREEN

- Pedal to **START** immediately. Or...
- Touch the **WORKOUTS** button to customize your workout.
- Touch the **SIGN IN** button to sign in using your XID.

SIGN IN

1) Enter your **XID** and touch ✔.
2) Enter your **PASSCODE** and touch ✔.

((•)) Consoles equipped with RFID will support logging in with RFID tag. To log in, touch your RFID tag to the right side surface of the console.

REGISTER A NEW USER

1) Don't have an xID account? Registration is easy.
2) Follow the on-screen prompts to create your free account.
3) Review your information and select the **I ACCEPT THE TERMS AND CONDITIONS** box to review the Terms and Conditions.
4) Touch ✔ to complete registration. Your account is now active and you are signed-in.

WORKOUT SETUP

1) After touching the **WORKOUTS** button, select one of the **WORKOUTS** from the list.
2) Use the **SLIDER CONTROLS** to adjust your program settings.
3) Press **GO** to begin your workout.

CHANGE WORKOUT

During a workout, touch ☰ and then touch **CHOOSE EXERCISE** to access available workouts.

SUMMARY SCREENS

After your workout is complete, a workout summary will appear. You can swipe up and down to scroll through the summary. Also, swipe the display left and right to switch between the summary screens.

COOL DOWN

Touch **START COOL DOWN** to enter cool down mode. Cool down lasts for a few minutes while reducing the workout intensity, allowing your body to recover from your workout. End cool down to go to workout summary.

CONSOLE OPERATION

TARGET TRAINING WORKOUT

1) Start pedaling until the default screen appears.
2) Either swipe right or tap the metric box with an orange triangle to take you directly to the desired screen.
3) Once on your desired screen, tap the large metric or the target icon to set your training goal and then touch ✓. The LED lights now become associated to that target.

LED LIGHTS

Target training programming uses bright color lights on the top and sides of the console to gauge effort and keep everyone on track of their goals. These lights may be turned on or off in the workout setup by pressing **LIGHTS ON** or **LIGHTS OFF**. The color indicators are: **BLUE** = below target, **GREEN** = on target, **RED** = above target.

MANAGER MODE

To enter manager mode, press and hold the **MATRIX** logo in the center of the screen for 10 seconds. Then enter **1001** and touch ✓.

POWER ACCURACY

This bike displays power on the console. The power accuracy of this model has been tested using the test method of ISO 20957-10:2017 to ensure a power accuracy within a tolerance of ±10 % for input power ≥50 W, and within a tolerance of ±5 W for input power <50 W. The power accuracy was verified using the following conditions:

Nominal Power Rotations per minute measured at crank

- 50 W 50 RPM
- 100 W 50 RPM
- 150 W 60 RPM
- 200 W 60 RPM
- 300 W 70 RPM
- 400 W 70 RPM

In addition to the above testing conditions, the manufacturer tested the power accuracy at one additional point, using a crank rotation speed of approximately 80 RPM (or higher) and comparing the displayed power to the input (measured) power.

WIRELESS HEART RATE

To connect your ANT+ or Bluetooth SMART heart rate device to the console, touch ☰ and then touch **HEART RATE DEVICE PAIRING**.

The heart rate function on this product is not a medical device. The heart rate reading is intended only as an exercise aid in determining heart rate trends in general. Please consult your physician.

When used in conjunction with a wireless chest strap or arm band, your heart rate can be transmitted wirelessly to the unit and displayed on the console.

WARNING!

Heart rate monitoring systems may be inaccurate. Over exercising may result in serious injury or death. If you feel faint, stop exercising immediately.

* Supported standards with carrier frequency of 13.56 MHz include; ISO 14443 A, ISO 15693, ISO 14443 B, Sony Felica, Inside Contact-less (HID iClass), and LEGIC RF.

BEFORE YOU BEGIN

LOCATION OF THE UNIT

Place the equipment on a level and stable surface away from direct sunlight. The intense UV light can cause discoloration on the plastics. Locate your equipment in an area with cool temperatures and low humidity. Please leave a clear zone on all sides of the equipment that is at least 60 cm (23.6”). This zone must be clear of any obstruction and provide the user a clear exit path from the machine. Do not place the equipment in any area that will block any vent or air openings. The equipment should not be located in a garage, covered patio, near water or outdoors.

WARNING!

Our equipment is heavy, use care and additional help if necessary when moving. Failure to follow these instructions could result in injury.

TRAINING AREA

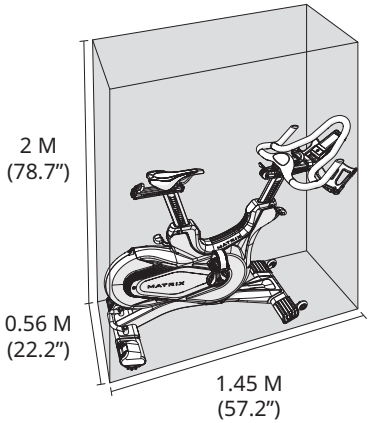

FREE AREA

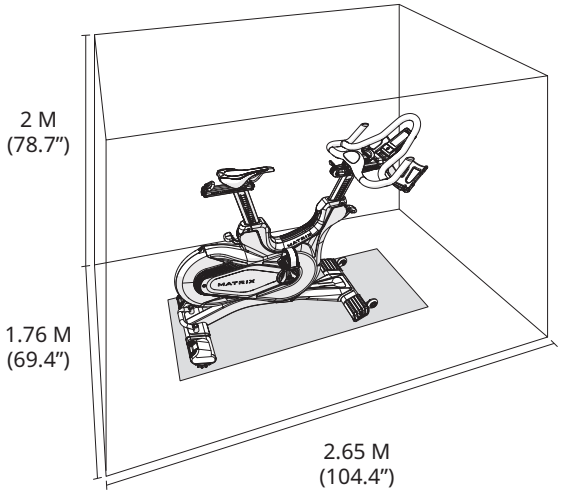

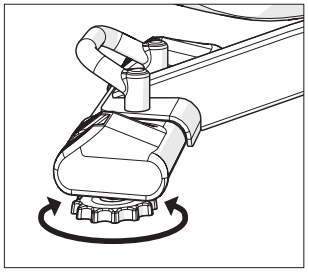

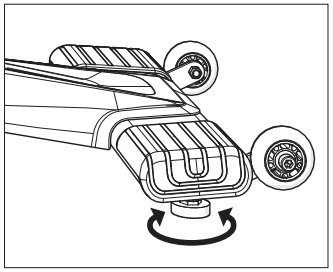

LEVELING THE EQUIPMENT

It is extremely important that the levelers are correctly adjusted for proper operation. Turn leveling foot clockwise to lower and counter-clockwise to raise unit. Adjust each side as needed until the equipment is level. An unbalanced unit may cause belt misalignment or other issues. Use of a level is recommended.

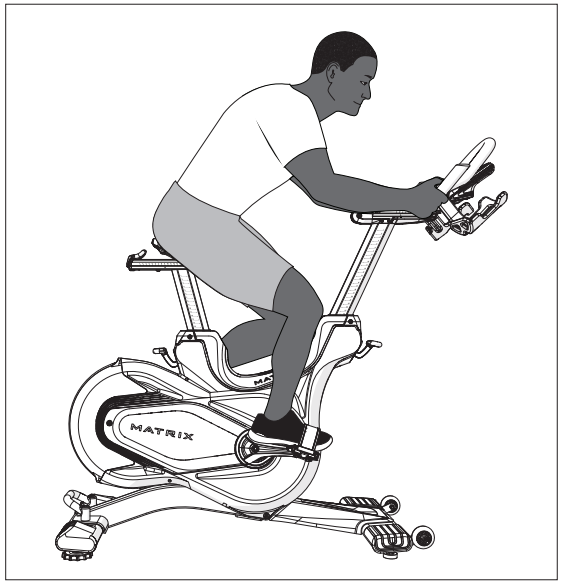

PROPER USAGE

1. Sit on the cycle facing the handlebars. Both feet should be on the floor one on each side of the frame.
2. To determine proper seat position, sit on the seat and position both feet on the pedals. Your knee should bend slightly at the furthest pedal position. You should be able to pedal without locking your knees or shifting your weight from side to side.
3. Adjust pedal straps to desired tightness.
4. To get off of the cycle, follow the proper usage steps in reverse.

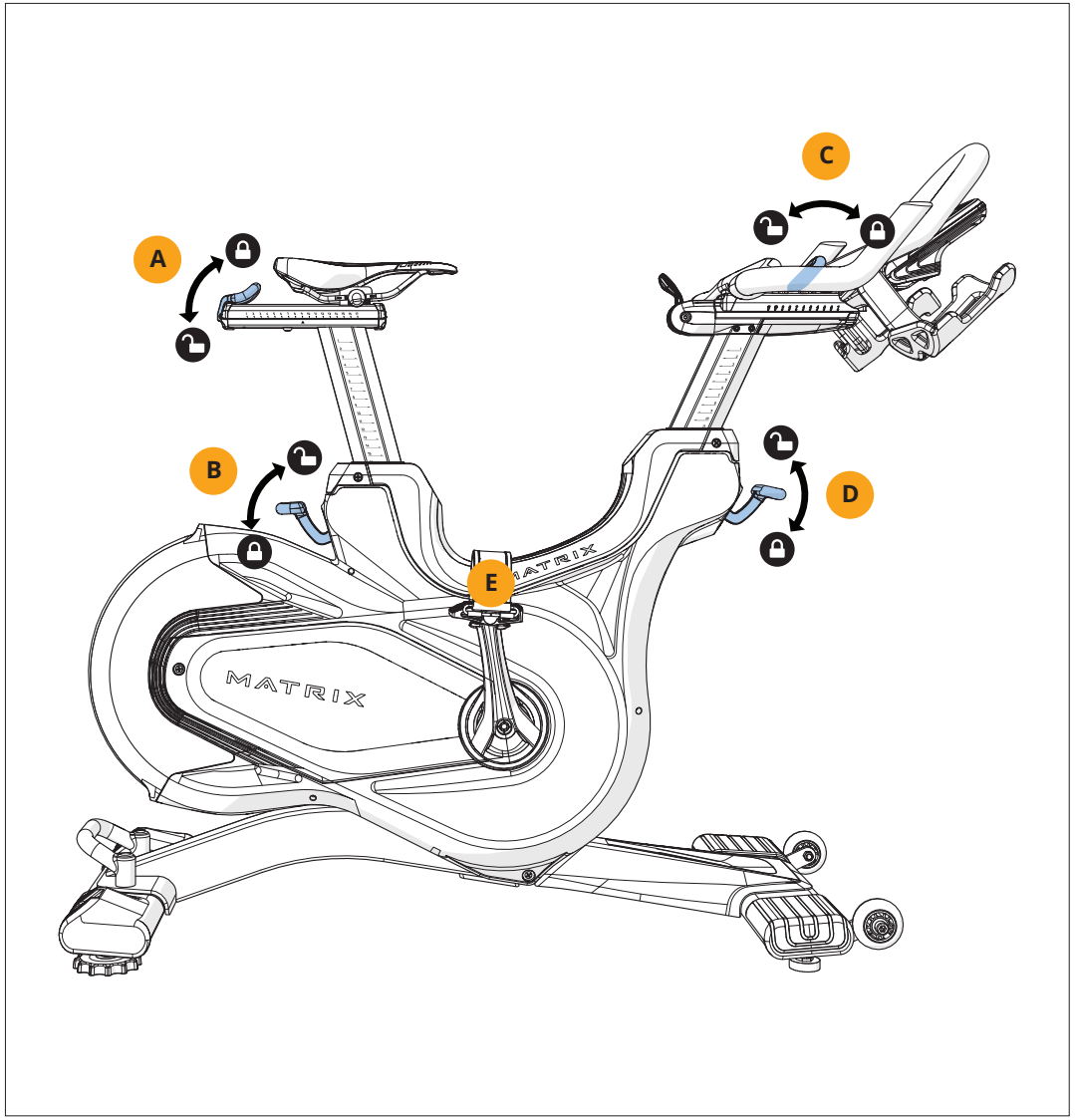

HOW TO ADJUST THE INDOOR CYCLE

The indoor cycle can be adjusted for maximum comfort and exercise effectiveness. The instructions below describe one approach to adjusting the indoor cycle to ensure optimal user comfort and ideal body positioning; you may choose to adjust the indoor cycle differently.

SADDLE ADJUSTMENT

Proper saddle height helps ensure maximum exercise efficiency and comfort, while reducing the risk of injury. Adjust the saddle height to make sure it's in proper position, one that keeps a slight bend in your knee while your legs are in the extended position

HANDLEBAR ADJUSTMENT

Proper position for the handlebar is based primarily on comfort. Typically, the handlebar should be positioned slightly higher than the saddle for beginning cyclists. Advanced cyclists could try different heights to get the arrangement most suitable for them.

A) SADDLE HORIZONTAL POSITION

Pull the adjustment lever down to slide the saddle forward or backward as desired. Push the lever up to lock saddle position. Test the saddle slide for proper operation.

B) SADDLE HEIGHT

Lift the adjustment lever up while sliding the saddle up and down with the other hand. Push the lever down to lock saddle position.

C) HANDLEBAR HORIZONTAL POSITION

Pull the adjustment lever towards the rear of the cycle to slide the handlebars forward or backward as desired. Push the lever forward to lock handlebar position.

D) HANDLEBAR HEIGHT

Pull the adjustment lever up while raising or lowering the handlebar with the other hand. Push the lever down to lock handlebar position.

E) PEDAL STRAPS

Place the ball of the foot into the toe cage until the ball of the foot is centered over the pedal, reach down and pull the pedal strap up to tighten prior to use. To remove your foot from the toe cage, loosen the strap and pull out.

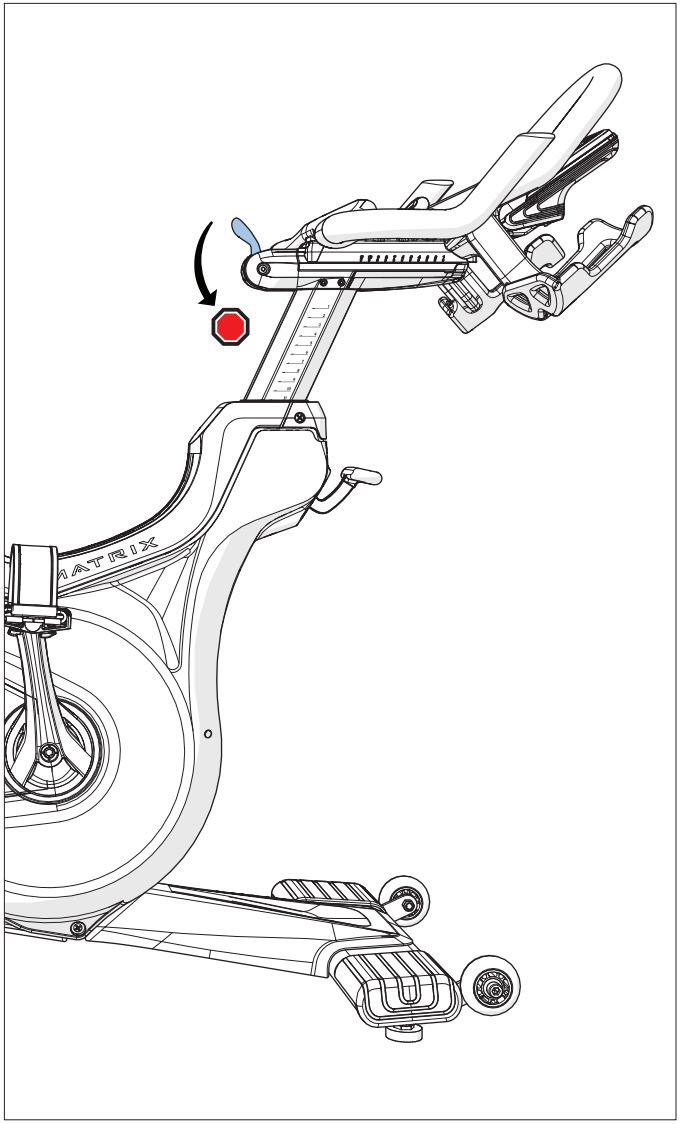

RESISTANCE CONTROL / EMERGENCY BRAKE

The preferred level of difficulty in pedaling (resistance) can be regulated in fine increments by use of the tension control lever. To increase the resistance, push the tension control lever towards the ground. To decrease the resistance, pull up the lever upwards.

IMPORTANT:

- To stop the flywheel while pedaling, push down hard on the lever.
- The flywheel should quickly come to a complete stop.
- Make sure your shoes are fixed into the toe clip.
- Apply full resistance load when the bike is not in use to prevent injuries due to moving drive gear components.

⚠ WARNING

The indoor cycle does not have a free moving flywheel; the pedals will continue to move together with the flywheel until the flywheel stops. Reducing speed in a controlled manner is required. To stop the flywheel immediately, push down the red emergency brake lever. Always pedal in a controlled manner and adjust your desired cadence according to your own abilities. Push the red lever down = emergency stop.

The indoor cycle uses a fixed flywheel that builds momentum and will keep the pedals turning even after the user stops pedaling or if the user's feet slip off. DO NOT ATTEMPT TO REMOVE YOUR FEET FROM THE PEDALS OR DISMOUNT THE MACHINE UNTIL BOTH THE PEDALS AND THE FLYWHEEL HAVE COMPLETELY STOPPED. Failure to follow these instructions may lead to loss of control and the potential for serious injury.

MAINTENANCE

1. Any and all part removal or replacement must be performed by a qualified service technician.
2. DO NOT use any equipment that is damaged and or has worn or broken parts. Use only replacement parts supplied by your country's local MATRIX dealer.
3. MAINTAIN LABELS AND NAMEPLATES: Do not remove labels for any reason. They contain important information. If unreadable or missing, contact your MATRIX dealer for a replacement.
4. MAINTAIN ALL EQUIPMENT: Preventative maintenance is the key to smooth operating equipment as well as keeping your liability to a minimum. Equipment needs to be inspected at regular intervals.
5. Ensure that any person(s) making adjustments or performing maintenance or repair of any kind is qualified to do so. MATRIX dealers will provide service and maintenance training at our corporate facility upon request.

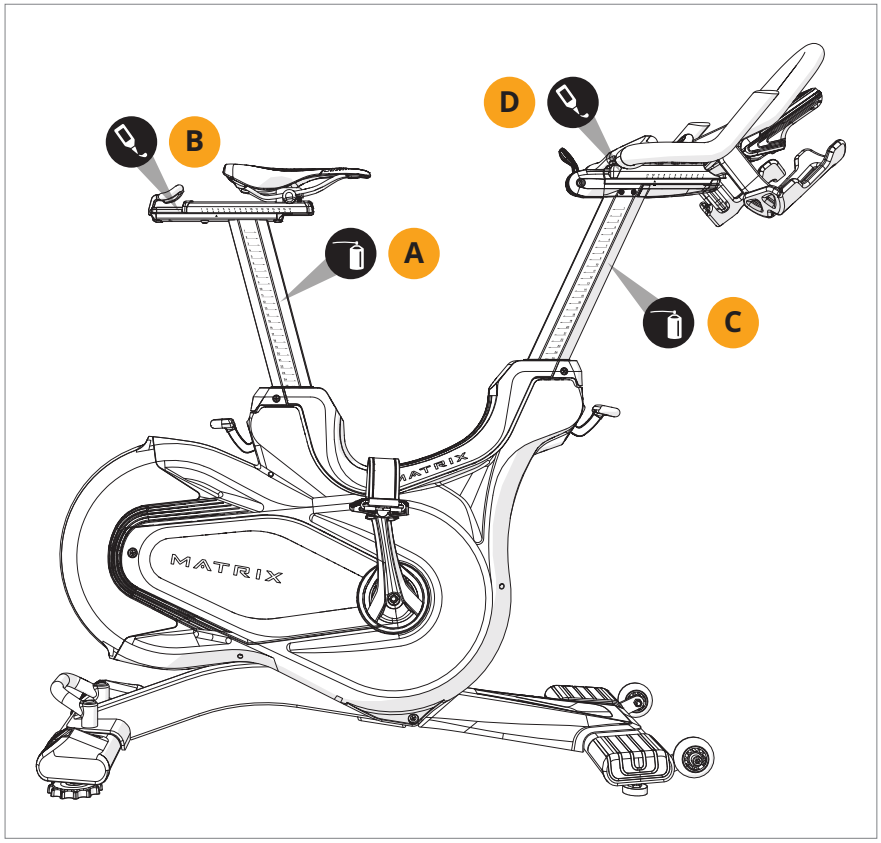

MAINTENANCE SCHEDULE

ACTION	FREQUENCY
Clean the indoor cycle using soft cloths or paper towels or other Matrix approved solution (cleaning agents should be alcohol and ammonia free). Disinfect the saddle and handlebars and wipe off all bodily residues.	AFTER EACH USE
Make sure that the indoor cycle is level and does not rock.	DAILY
Clean entire machine using water and a mild soap or other Matrix approved solution (cleaning agents should be alcohol and ammonia free). Clean all exterior parts, the steel frame, front and rear stabilizers, seat and handlebars.	WEEKLY
Test the emergency brake to make sure it is functioning properly. To do this, press down the red emergency brake lever while pedaling. When functioning properly, it should immediately slow down the flywheel until it comes to a complete stop.	BI-WEEKLY
Lubricate the saddle post (A). To do this, raise the saddle post to the MAX position, spray with maintenance spray and rub down the entire exterior surfaces with a soft cloth. Clean the saddle slide (B) with a soft cloth and if necessary apply a small amount of lithium/silicone grease.	BI-WEEKLY
Lubricate the handlebar post (C). To do this, raise the handlebar post to the MAX position, spray with maintenance spray and rub down the entire exterior surfaces with a soft cloth. Clean the handlebar slide (D) with a soft cloth and if necessary apply a small amount of lithium/silicone grease.	BI-WEEKLY
Inspect all assembly bolts and pedals on the machine for proper tightness.	MONTHLY
Inspect handlebar and seat height adjustment levers for proper tightness. 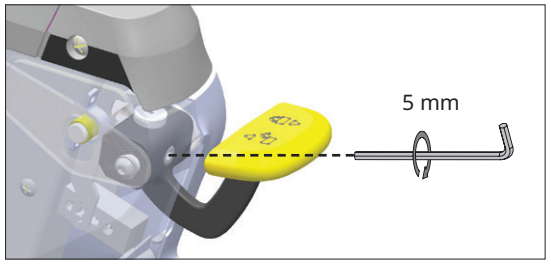 	MONTHLY

PRODUCT SPECIFICATIONS

	CXP Indoor Cycle
Max User Weight	159 kg / 350 lbs
User Height Range	147 – 200.7 cm / 4'11" – 6'7"
Max Saddle and Handlebar Height	130.3 cm / 51.3"
Max Length	145.2 cm / 57.2"
Product Weight	57.6 kg / 127 lbs
Shipping Weight	63.5 kg / 140 lbs
Required Footprint (L x W)*	122.4 x 56.3 cm / 48.2" x 22.2"
Dimensions (max saddle & handlebar height)	145.2 x 56.4 x 130.2 cm / 57.2" x 22.2 x 51.3"
Overall Dimensions (L x W x H)*	122.4 x 56.4 x 102.8 cm / 48.2" x 22.2 x 40.5"

* Ensure a minimum clearance width of 0.6 meters (24") for access to and passage around MATRIX equipment. Please note, 0.91 meters (36") is the ADA recommended clearance width for individuals in wheelchairs.

For most current owner's manual and information, check **www.matrixfitness.com**

NOTE:

This equipment has been tested and found to comply with the limits for a Class B digital device, pursuant to part 15 of the FCC rules. These limits are designed to provide reasonable protection against harmful interference in a residential installation. This equipment generates, uses and can radiate radio frequency energy and, if not installed and used in accordance with the instructions, may cause harmful interference to radio communications. However, there is no guarantee that interference will not occur in a particular installation. If this equipment does cause harmful interference to radio or television reception, which can be determined by turning the equipment off and on, the user is encouraged to try to correct the interference by one or more of the following measures:

- Reorient or relocate the receiving antenna.
- Increase the separation between the equipment and receiver.
- Connect the equipment into an outlet on a circuit different from that to which the receiver is connected.
- Consult the dealer or an experienced radio/TV technician for help.

Any changes or modifications not expressly approved by the party responsible for compliance could void the user's authority to operate this equipment.

FCC RF Radiation Exposure Statement:

1. This Transmitter must not be co-located or operating in conjunction with any other antenna or transmitter.
2. This equipment complies with FCC RF radiation exposure limits set forth for an uncontrolled environment. This equipment should be installed and operated with a minimum distance of 20 centimeters between the radiator and your body

MATRIX

© 2018 Johnson Health Tech
Part # 1000411498
Rev 1.0 A