MATRIX

AURA SERIES

G3-S22

PRODUCT INFORMATION

PROPER USAGE

1. Do not exceed weight limits of the exercise device.
2. If applicable, set safety stops to appropriate height.
3. If applicable, adjust seat pads, leg pads, foot pads, range of motion adjustment, or any other type of adjustment mechanisms to a comfortable start position. Make certain that the adjusting mechanism is fully engaged to prevent unintentional movement and to avoid injury.
4. Sit on bench (if applicable) and get into appropriate position for exercise.
5. Exercise using no more weight than you can safely lift and control.
6. In a controlled manner, perform exercise.
7. Return weight to its fully-supported start position.

TRAINING AREA

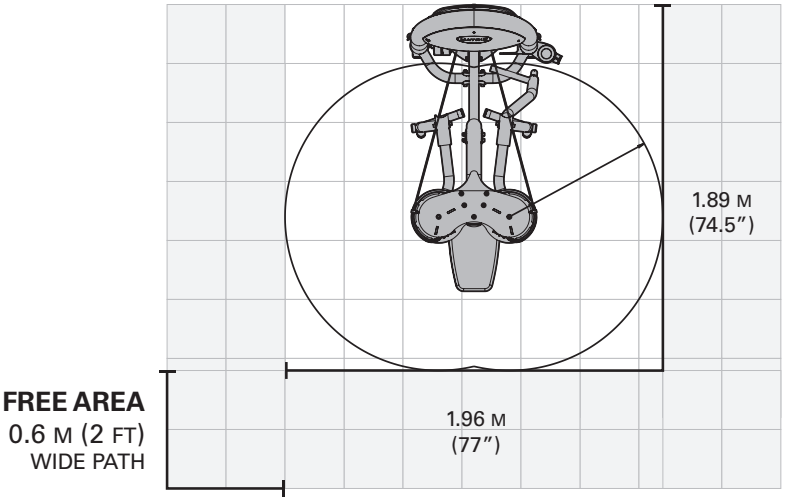

MAINTENANCE CHECKLIST

ACTION	FREQUENCY
Clean Upholstery [1]	Daily
Inspect Cables [2]	Daily
Clean Guide Rods	Monthly
Inspect Hardware	Monthly
Inspect Frame	Bi-Annually
Clean Machine	As Needed
Clean Grips [1]	As Needed
Lubricate Guide Rods [3]	As Needed

[1] Upholstery & Grips should be cleaned with a mild soap and water or a non-ammonia based cleaner.

[2] Cables should be inspected for cracks or frays and immediately replaced if present. If excessive slack exists cable should be tightened without lifting the head plate.

[3] Guide rods should be lubricated with Teflon based lubricant. Apply the lubricant to a cotton cloth and then apply up and down the guide rods.

PRODUCT SPECIFICATIONS

Max User Weight	136 kg / 300 lbs
Max Training Weight	138.6 kg / 305 lbs
Product Weight	288.5 kg / 636 lbs
Overall Dimensions (L x W x H)*	189 x 195.5 x 205 cm / 74.5 x 77 x 81"

* Ensure a minimum clearance width of 0.6 meters (24") for access to and passage around MATRIX strength equipment. Please note, 0.91 meters (36") is the ADA recommended clearance width for individuals in wheelchairs.

TORQUE VALUES

M12 Bolt (Nyloc Nut & Flowdrill)	135 Nm / 100 ft-lbs
M10 Bolt (Nyloc Nut & Flowdrill)	77 Nm / 57 ft -lbs
M8 Bolts	25 Nm / 18 ft-lbs
M8 Plastic	15 Nm / 11 ft-lbs
M6 Bolts	15 Nm / 11 ft-lbs
Pad Bolts	10 Nm / 7 ft-lbs

PRODUCT INFORMATION

IMPORTANT SAFETY INFORMATION

It is the sole responsibility of the purchaser of MATRIX products to instruct all individuals, whether they are the end user or supervising personnel on proper usage of the equipment.

It is recommended that all users of MATRIX exercise equipment be informed of the following information prior to its use.

Do not use any equipment in any way other than designed or intended by the manufacturer. It is imperative that MATRIX equipment be used properly to avoid injury.

INSTALLATION

1. STABLE AND LEVEL SURFACE: MATRIX exercise equipment must be installed on a stable base and properly leveled.
2. **SECURING EQUIPMENT: Manufacturer recommends that all stationary MATRIX strength equipment be secured to the floor to stabilize equipment and eliminate rocking or tipping over. This must be performed by a licensed contractor.**
3. Under no circumstances should you slide equipment across the floor due to risk of tipping. Use proper materials handling techniques and equipment recommended by OSHA.

   All anchor points must be able to withstand 750 lbs. (3.3 kN) pull-out force.

MAINTENANCE

1. DO NOT use any equipment that is damaged and or has worn or broken parts. Use only replacement parts supplied by your country's local MATRIX dealer.
2. MAINTAIN LABELS AND NAMEPLATES: Do not remove labels for any reason. They contain important information. If unreadable or missing, contact your MATRIX dealer for a replacement.
3. MAINTAIN ALL EQUIPMENT: Preventative maintenance is the key to smooth operating equipment as well as keeping your liability to a minimum. Equipment needs to be inspected at regular intervals.
4. Ensure that any person(s) making adjustments or performing maintenance or repair of any kind is qualified to do so. MATRIX dealers will provide service and maintenance training at our corporate facility upon request.

ADDITIONAL NOTES

This equipment should only be used in supervised areas where access and control is specifically regulated by the owner. It is up to the owner to determine who is allowed access to this training equipment. The owner should consider a user's: degree of reliability, age, experience, etc.

This training equipment meets industry standards for stability when used for its intended purpose in accordance with the instructions provided by the manufacturer.

This equipment is for indoor use only. This training equipment is a Class S product (designed for use in a commercial environment such as a fitness facility). This training equipment is in compliance with EN 957-1 and the relevant portions of EN 957-2 and EN 957-4.

UNPACKING

Thank you for purchasing a MATRIX Fitness product. It is inspected before it is packaged. It is shipped in multiple pieces to facilitate the compact packaging of the machine. Prior to assembly, confirm all the components by matching them with the exploded diagrams. Carefully unpack the unit from this box and dispose of the packing materials in accordance with your local laws. Exercise device must be assembled by a trained assembly team or be pre-assembled prior to delivery.

CAUTION

To avoid injury to yourself and prevent damage to the frame components, be sure to have proper assistance removing the frame pieces from this box. Please be sure to install the equipment on a stable base, and properly level the machine. Ensure a minimum clearance width of 0.6 meters (24") for access to and passage around MATRIX strength equipment. Please note, 0.91 meters (36") is the ADA recommended clearance width for individuals in wheelchairs.

WARRANTY

For North America, please visit **matrixfitness.com** for warranty information along with warranty exclusions and limitations.

⚠ WARNING

DEATH OR SERIOUS INJURY CAN OCCUR ON THIS EQUIPMENT. FOLLOW THESE PRECAUTIONS TO AVOID INJURY!

1. Keep children under the age of 14 away from this strength training equipment. Teenagers must be supervised at all times while using this equipment.
2. This equipment is not intended for use by persons with reduced physical, sensory or mental capabilities, or lack of experience and knowledge, unless they have been given supervision or instruction concerning use of the equipment by a person responsible for their safety.
3. All warnings and instructions should be read and proper instruction obtained prior to use. Use this equipment for its intended purpose ONLY.
4. Inspect the machine before use. DO NOT use machine if it appears damaged or inoperable.
5. Do not exceed weight capacity of this equipment.
6. Check to see that the selector pin is completely inserted into the weight stack.
7. NEVER use the machine with the weight stack pinned in an elevated position.
8. NEVER use dumbbells or other means to incrementally increase the weight resistance. Only use the means provided directly from the manufacturer.
9. Injuries to health may result from incorrect or excessive training. Cease exercise if you feel faint or dizzy. Obtain a medical exam before beginning an exercise program.
10. Keep body, clothing, hair, and fitness accessories free and clear of all moving parts.
11. Adjustable stops, where provided, must be used at all times.
12. When adjusting any adjustable mechanism (stop position, seat position, pad location, range of motion limiter, pulley carriage, or any other type), make certain that the adjustable mechanism is fully engaged prior to use to prevent unintended motion.
13. Manufacturer recommends that this equipment be secured to the floor to stabilize and eliminate rocking or tipping over. Use a licensed contractor.
14. If equipment is NOT secured to floor: NEVER allow resistance straps, ropes or other means to be attached to this equipment, as this may result in serious injury. NEVER use this equipment for support during stretching, as this may result in serious injury.
15. DO NOT REMOVE THIS LABEL. REPLACE IF DAMAGED OR ILLEGIBLE.

ASSEMBLY

1	Hardware	Qty
C32	Arc Washer (M10)	9
C33	Bolt (M10x100L)	6
C35	Bolt (M10x75L)	8
F19	Nut (M10)	12
F30	Bolt (M10x20L)	1
Z32	Flat Washer (M10)	18
B18	Bolt (M8x20L)	2

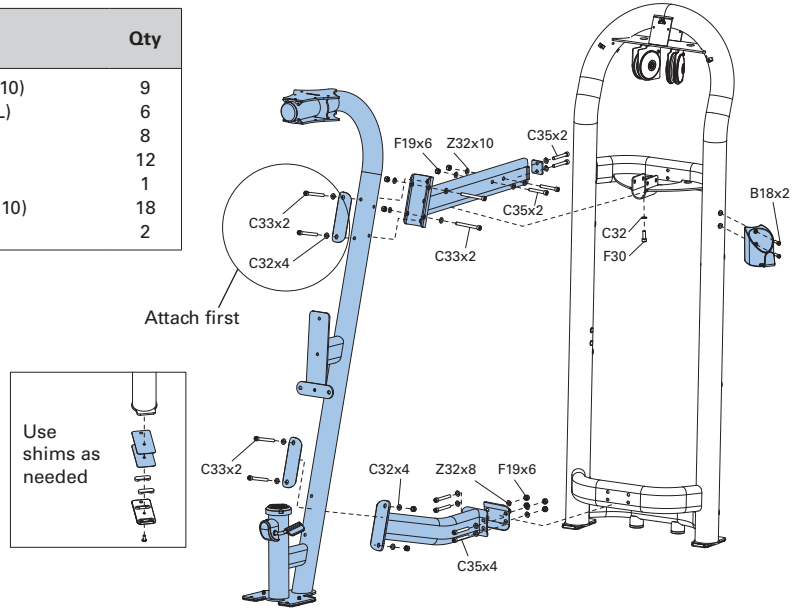

2	Hardware	Qty
K13	Snap Ring	4

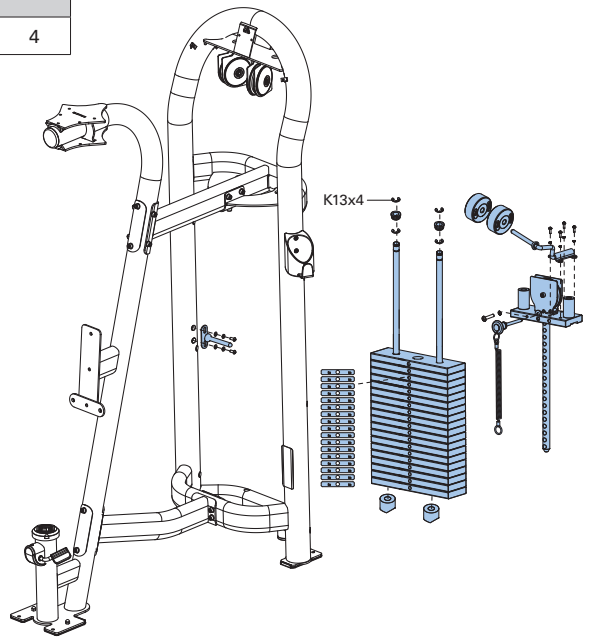

3	Hardware	Qty
C20	Flat Washer (M10)	10
C21	Large Flat Washer	4
F30	Bolt (M10x20L)	14
Z34	Flat Washer (M8)	8

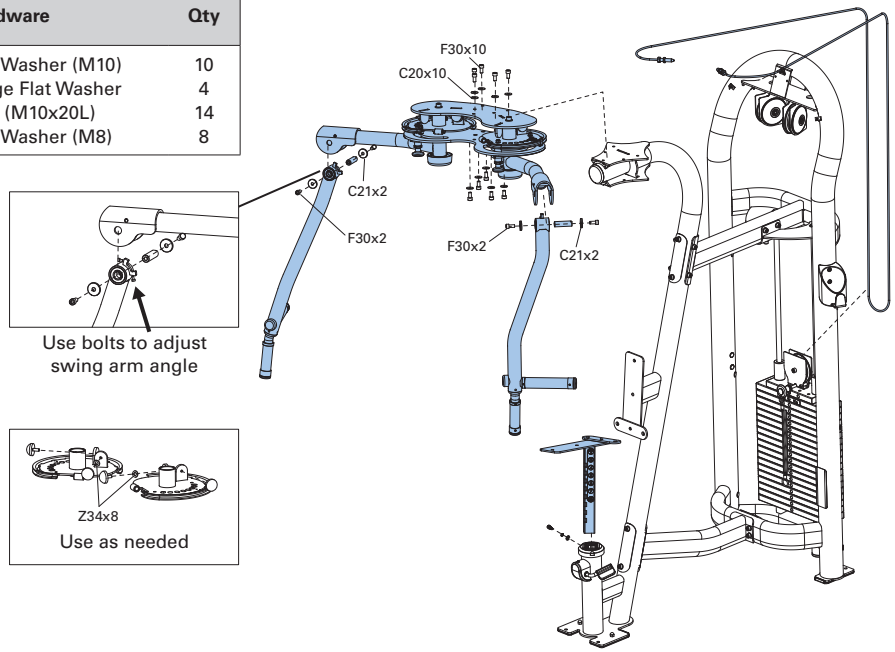

4	Hardware	Qty
B33	Flat Washer (M4)	6
B43	Screw (M4x12L)	6
C29	Bolt (M10x30L)	6
Z32	Flat Washer (M10)	6

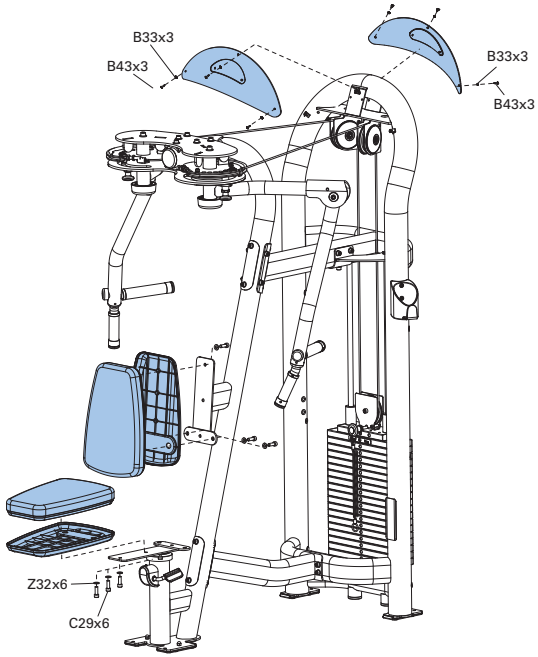

ASSEMBLY

5

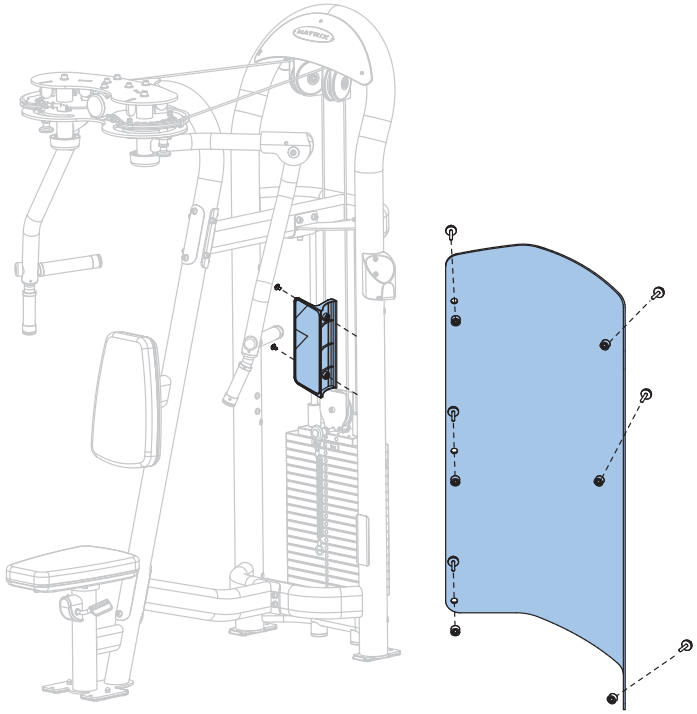

ASSEMBLY COMPLETE

PLACARD

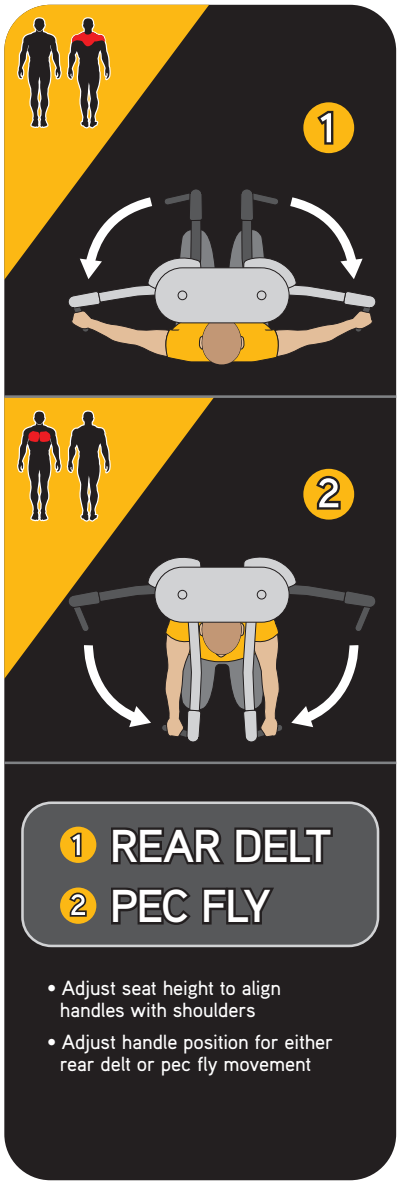

MATRIX

G3-S22

© 2023 Johnson Health Tech

Rev 1.1 A