MATRIX

T3xe T3xh T3xm T3x T1xe T1x

IMPORTANT PRECAUTIONS

SAVE THESE INSTRUCTIONS

- When using a treadmill, basic precautions should always be followed, including the following: Read all instructions before using this equipment. It is the responsibility of the owner to ensure that all users of this equipment are adequately informed of all warnings and precautions.
- This equipment is intended for commercial use. To ensure your safety and protect the equipment, read all instructions before operating.

DANGER!

TO REDUCE THE RISK OF ELECTRICAL SHOCK:

- Always unplug the equipment from the electrical outlet immediately after using, before cleaning, performing maintenance and putting on or taking off parts.

WARNING!

TO REDUCE THE RISK OF BURNS, FIRE, ELECTRICAL SHOCK OR INJURY TO PERSONS:

- Incorrect or excessive exercise may cause injury. If you experience any kind of pain, including but not limited to chest pains, nausea, dizziness, or shortness of breath, stop exercising immediately and consult your physician before continuing.
- When exercising, always maintain a comfortable pace.
- Do not wear clothes that might catch on any part of the treadmill.
- User must wear proper footwear (i.e. athletic shoes) when using this exercise device.
- Do not jump on the treadmill.
- At no time should more than one person be on treadmill while in operation.
- This treadmill should not be used by persons weighing more than specified in the OWNER'S MANUAL SPECIFICATIONS SECTION. Failure to comply will void the warranty.
- Disconnect all power before servicing or moving the equipment. To clean, wipe surfaces down with soap and slightly damp cloth only; never use solvents. (See MAINTENANCE)
- The treadmill should never be left unattended when plugged in. Unplug from outlet when not in use, and before putting on or taking off parts.
- Do not operate under blanket or pillow. Excessive heating can occur and cause fire, electric shock, or injury to persons.
- Connect this exercise product to a properly grounded outlet only.
- Installation of parts or accessories not originally intended or compatible with the equipment as sold will void warranty and may impact safety.
- Measured at typical head height, the A-weighted sound pressure level when the Treadmill is running at 12 Km/ Hour (without load) is no greater than 82 dB.
- Noise emission under load is higher than without load.
- At NO time should pets or children under the age of 14 be closer to the treadmill than 10 feet.
- At NO time should children under the age of 14 use the treadmill.
- Children over the age of 14 should not use the treadmill without adult supervision.
- This equipment is not intended for use by persons with reduced physical, sensory or mental capabilities, or lack of experience and knowledge, unless they have been given supervision or instruction concerning use of the equipment by a person responsible for their safety.
- Use the treadmill only for its intended use as described in the treadmill guide and owner's manual.
- Do not use other attachments that are not recommended by the manufacturer. Attachments may cause injury.
- Never operate the treadmill if it has a damaged cord or plug, if it is not working properly, if it has been dropped or damaged, or immersed in water. Call Customer Tech Support for examination and repair.
- Keep power cord away from heated surfaces. Do not carry this unit by its supply cord or use the cord as a handle.
- Never operate the treadmill with the air opening blocked. Keep the air opening clean, free of lint, hair, and the like.
- To prevent electrical shock, never drop or insert any object into any opening.
- Do not operate where aerosol (spray) products are being used or when oxygen is being administered.
- To disconnect, turn all controls to the off position, then remove plug from outlet.
- Do not use treadmill in any location that is not temperature controlled, such as but not limited to garages, porches, pool rooms, bathrooms, car ports or outdoors. Failure to comply may void the warranty.
- Removal of protective access panels should be done ONLY by a qualified service technician. Ensure all fasteners are properly reinstalled after replacing access panels.
- To avoid injury, stand on the side rails before starting the treadmill.
- Heart rate monitoring systems may be inaccurate.
- Over exercising may result in serious injury or death.
- If you feel faint, stop exercising immediately.

CAUTION!

CONSULT A PHYSICIAN BEFORE USING THIS EQUIPMENT. READ OWNER'S MANUAL BEFORE USE.

- It is essential that this equipment is used only indoors, in a climate controlled room. If this equipment has been exposed to colder temperatures or high moisture climates, it is strongly recommended that the equipment is warmed up to room temperature before first time use. Failure to do so may cause premature electronic failure. The initial (default) starting speed is 0.5 mph (0.8 kph). The default starting speed set too high can be dangerous.

POWER REQUIREMENTS

DEDICATED CIRCUIT AND ELECTRICAL INFO

A “Dedicated Circuit” means that each outlet you plug into should not have anything else running on that same circuit. The easiest way to verify this is to locate the main circuit breaker box, and turn off the breaker(s) one at a time. Once a breaker has been turned off, the only thing that should not have power to it are the units in question. No lamps, vending machines, fans, sound systems, or any other item should lose power when you perform this test.

Non-looped (isolated) neutral/grounding means that each circuit must have an individual neutral/ground connection coming from it, and terminating at an approved earth ground. You cannot “jumper” a single neutral/ground from one circuit to the next.

ELECTRICAL REQUIREMENTS

For your safety and to ensure good treadmill performance, the ground on this circuit must be non-looped (isolated). Please refer to NEC article 210-21 and 210-23. Your treadmill is provided with a power cord with a plug listed below and requires the listed outlet. Any alterations of this power cord could void all warranties of this product.

For units with an integrated TV (like the 7xe and 7xi), the TV power requirements are included in the unit. An RG6 coaxial cable with ‘F Type’ compression fittings on each end will need to be connected to the cardio unit and the video source. For units with an add-on digital TV (5x only), the machine in which the add-on digital TV is connected to powers the add-on digital TV. Additional power requirements are not needed for the add-on digital TV. For units with an add-on PCTV (5x only), the TV power requirements are separate.

110 V UNITS

All Matrix 5x, 7xe and 7xi 110 V treadmills require the use of a 100-125 V, 60 Hz and a 20 A “Dedicated Circuit”, with a non-looped (isolated) neutral/ground for power. This outlet should be a NEMA 5-20R and have the same configuration as the plug. No adapter should be used with this product.

220 V UNITS

All Matrix 5x, 7xe and 7xi 220 V treadmills require the use of a 216-250 V, 50 Hz and a 20 A “Dedicated Circuit”, with a non-looped (isolated) neutral/ground for power. This outlet should be a NEMA 6-20R and have the same configuration as the plug. No adapter should be used with this product.

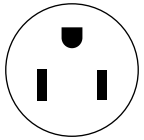

110 NEMA 5-15P PLUG (N.A.)

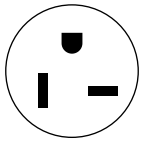

220 NEMA 6-20P PLUG (N.A.)

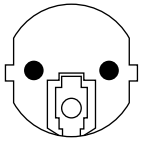

EURO PLUG (EUROPE)

North American and European power cord plugs shown. Depending on your country, the plug type may vary.

GROUNDING INSTRUCTIONS

The equipment must be grounded. If it should malfunction or breakdown, grounding provides a path of least resistance for electric current to reduce the risk of electric shock. The unit is equipped with a cord having an equipment-grounding conductor and a grounding plug. The plug must be plugged into an appropriate outlet that is properly installed and grounded in accordance with all local codes and ordinances. If the user does not follow these grounding instructions, the user could void the Matrix limited warranty.

ADDITIONAL ELECTRICAL INFO

In addition to the dedicated circuit requirement, the proper gauge wire must be used from the circuit breaker box, to each outlet that will have the maximum number of units running off of it. If the distance from the circuit breaker box to each outlet, is 100 ft (30.5 m) or less, then 12 gauge wire should be used. For distances greater than 100 ft (30.5 m) from the circuit breaker box to the outlet, a 10 gauge wire should be used.

ENERGY SAVING / LOW-POWER MODE

All units are configured with the ability to enter into an energy saving / low-power mode when the unit has not been in use for a specified period of time. Additional time may be required to fully reactivate this unit once it has entered the low-power mode. This energy saving feature may be enabled or disabled from within the ‘Manager Mode’ or ‘Engineering Mode.’

ADD-ON DIGITAL TV (T1X AND T3X)

A 15 A or 20 A “Dedicated Circuit” with a non-looped (isolated) neutral/ground is required. Each add-on TV requires at least 1.2 A of current (at 110 V or 220 V). No more than 12 add-on TVs should be used for each 15 A circuit and no more than 16 add-on TVs should be used for each 20 A circuit. The power outlet should have the same configuration as the plug. No adapter should be used with this product. An RG6 coaxial cable with ‘F Type’ compression fittings will need to be connected between the video source and each add-on TV unit.

WARNING!

- Connect this exercise product to a properly grounded outlet only.
- Never operate product with a damaged cord or plug even if it is working properly. Never operate any product if it appears damaged, or has been immersed in water. Contact Customer Tech Support for replacement or repair.

Failure to follow these specifications can cause damage to your product and can void the warranty:

- All video and power outlets must be functional the day of delivery / assembly of the product. The client is responsible for any additional installation charges associated with return visits.
- Electrical supply may fluctuate in your area. To ensure stable performance of the product, use the proper gauge wire.

DANGER!

Improper connection of the equipment-grounding conductor can result in a risk of electric shock. Check with a qualified electrician or serviceman if you are in doubt as to whether the product is properly grounded. Do not modify the plug provided with the product. If it will not fit the outlet, have a proper outlet installed by a qualified electrician.

ASSEMBLY

UNPACKING

Unpack the equipment where you will be using it. Place the carton on a level flat surface. It is recommended that you place a protective covering on your floor. Never open box when it is on its side.

IMPORTANT NOTES

During each assembly step, ensure that ALL nuts and bolts are in place and partially threaded.

Several parts have been pre-lubricated to aid in assembly and usage. Please do not wipe this off. If you have difficulty, a light application of lithium grease is recommended.

WARNING!

There are several areas during the assembly process that special attention must be paid. It is very important to follow the assembly instructions correctly and to make sure all parts are firmly tightened. If the assembly instructions are not followed correctly, the equipment could have parts that are not tightened and will seem loose and may cause irritating noises. To prevent damage to the equipment, the assembly instructions must be reviewed and corrective actions should be taken.

NEED HELP?

If you have questions or if there are any missing parts, contact Customer Tech Support. Contact information is located on the information card.

TOOLS REQUIRED:

- ☐ 8mm T-Wrench
- ☐ 5mm Allen Wrench
- ☐ 6mm Allen Wrench
- ☐ Phillips Screwdriver

PARTS INCLUDED:

- ☐ 1 Base Frame
- ☐ 2 Console Masts
- ☐ 2 Console Mast Brackets
- ☐ 1 Console Assembly
- ☐ 2 Handlebar Covers
- ☐ 1 Power Cord
- ☐ 1 Hardware Kit

Console sold separately

ENGLISH

1

ALL MODELS

Pre-Installed Hardware

	Description	Qty
A	Bolt	2

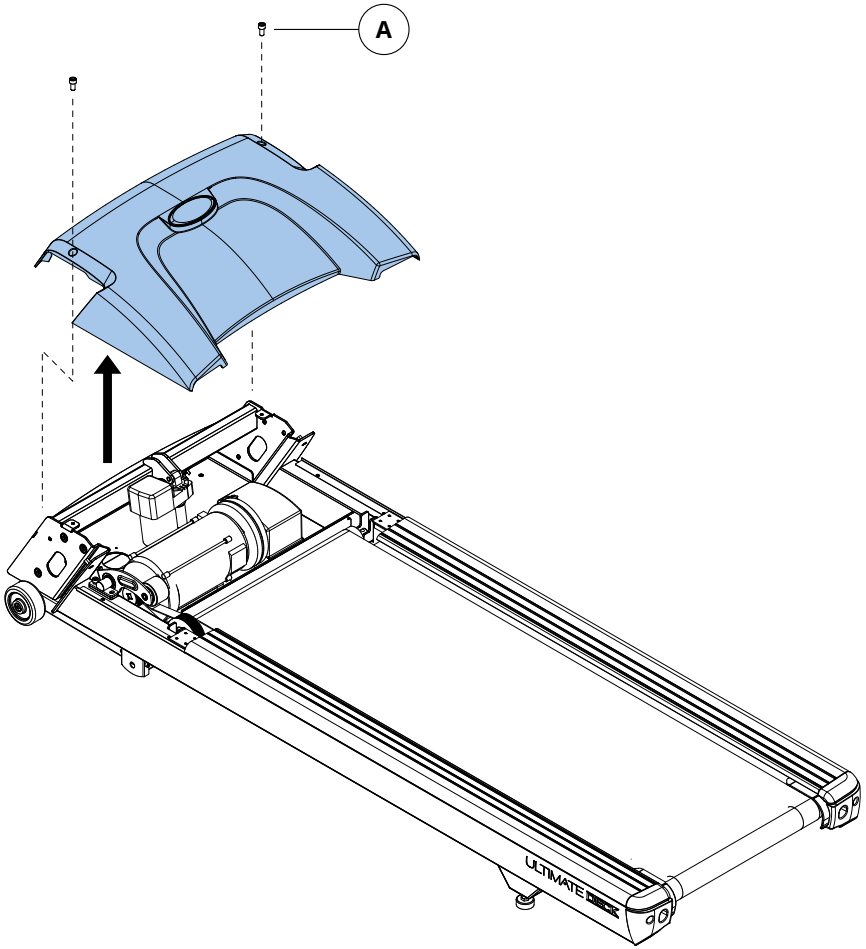

2

ALL MODELS

Blue Hardware Bag

	Description	Qty
B	Bolt	8
C	Flat Washer	8

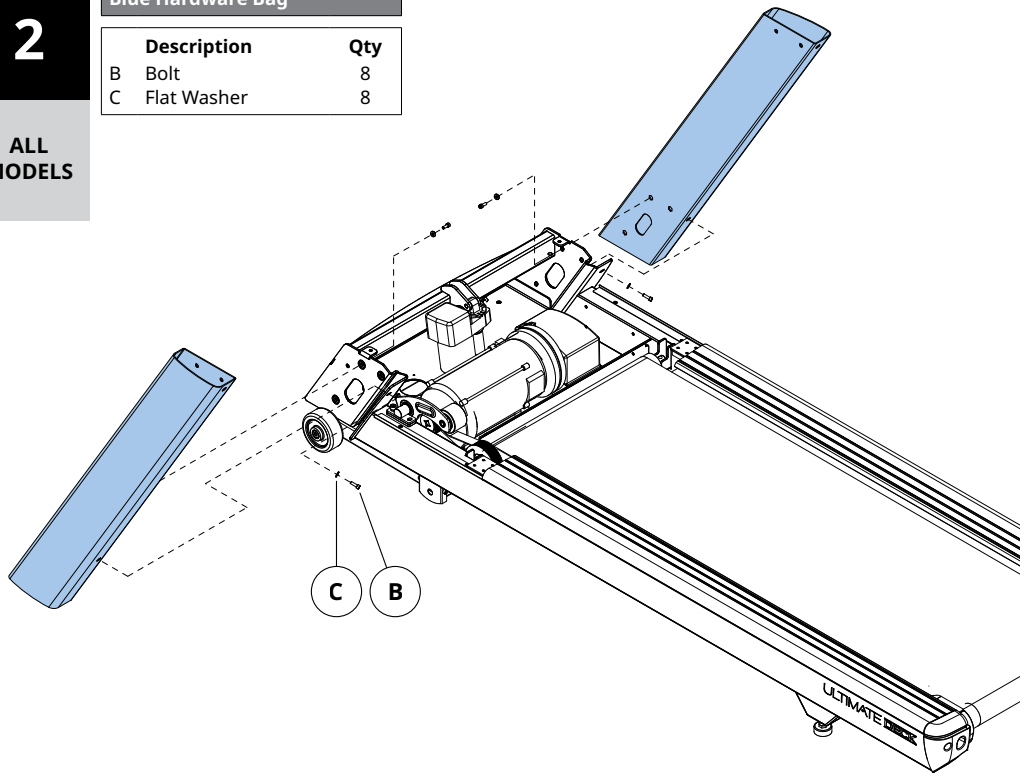

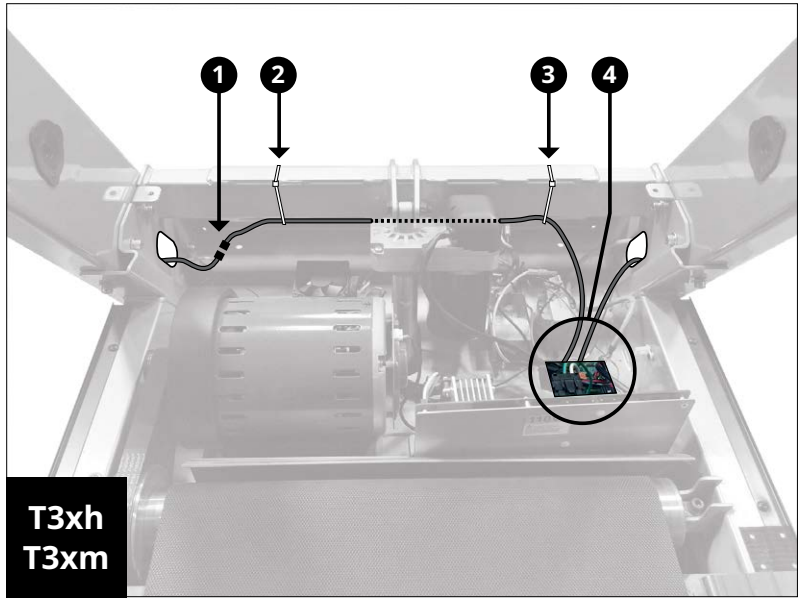

3

T3x
T1x

T3xh
T3xm

Yellow / White Hardware Bags

	Description	Qty
D	Bolt	2
E	Bolt	6
F	Flat Washer	6

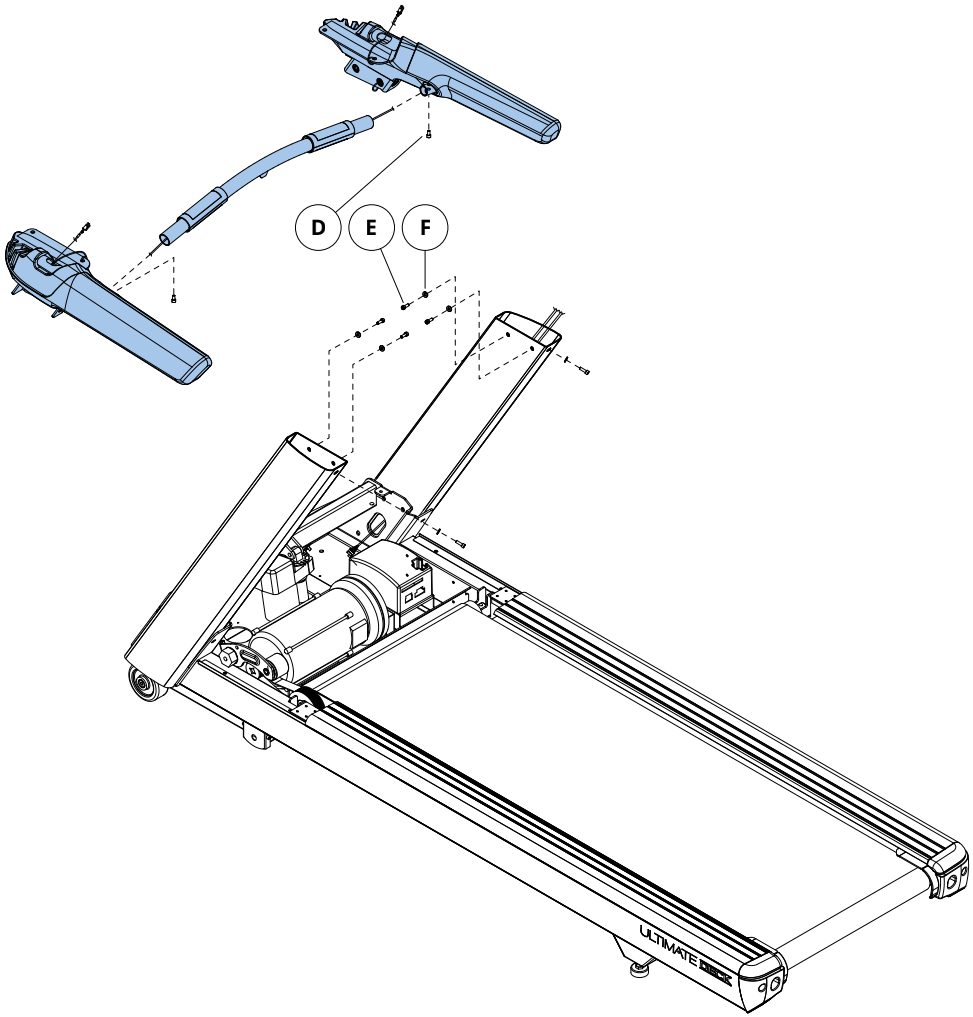

4

T3x
T1x

T3xh
T3xm

Black Hardware Bag

	Description	Qty
G	Bolt	4

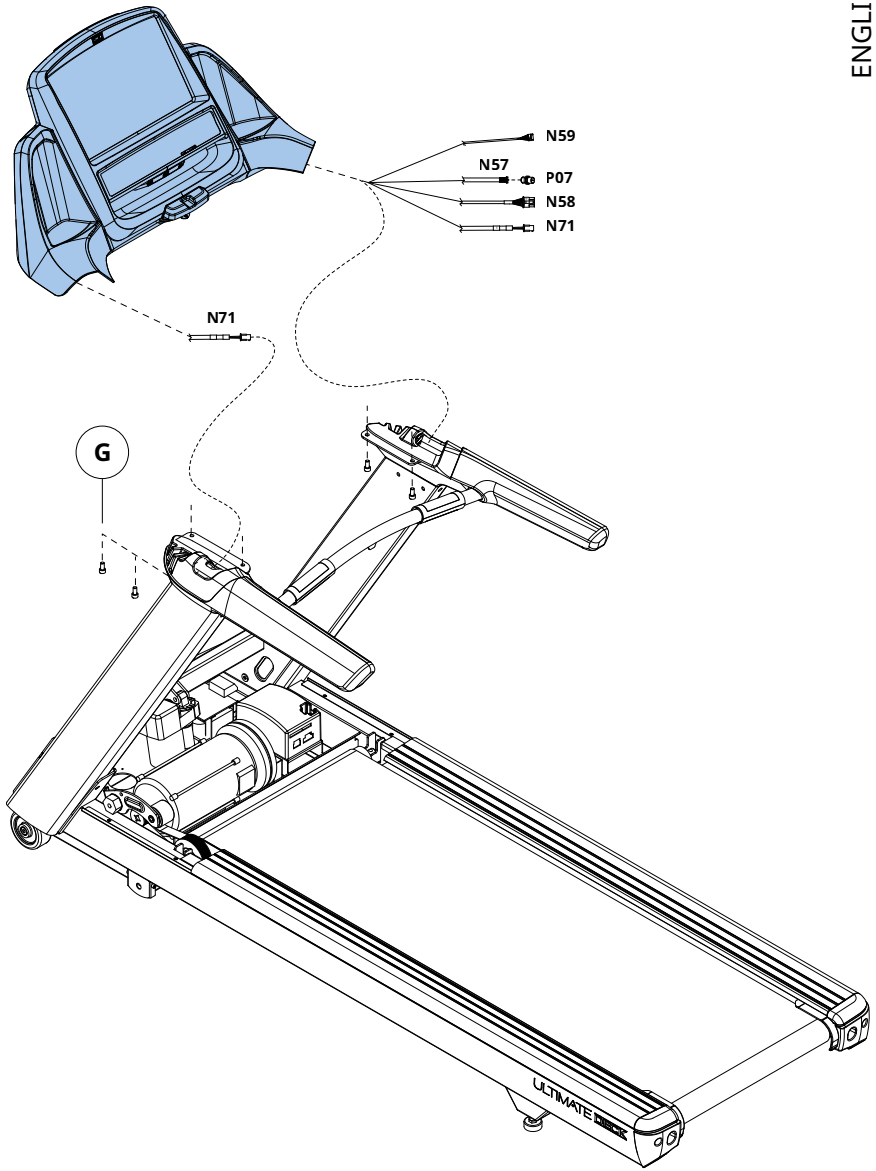

ENGLISH

ENGLISH

3

T3xh
T3xm

T3x
T1x

White Hardware Bag

	Description	Qty
D	Bolt	4
E	Spring Washer	4

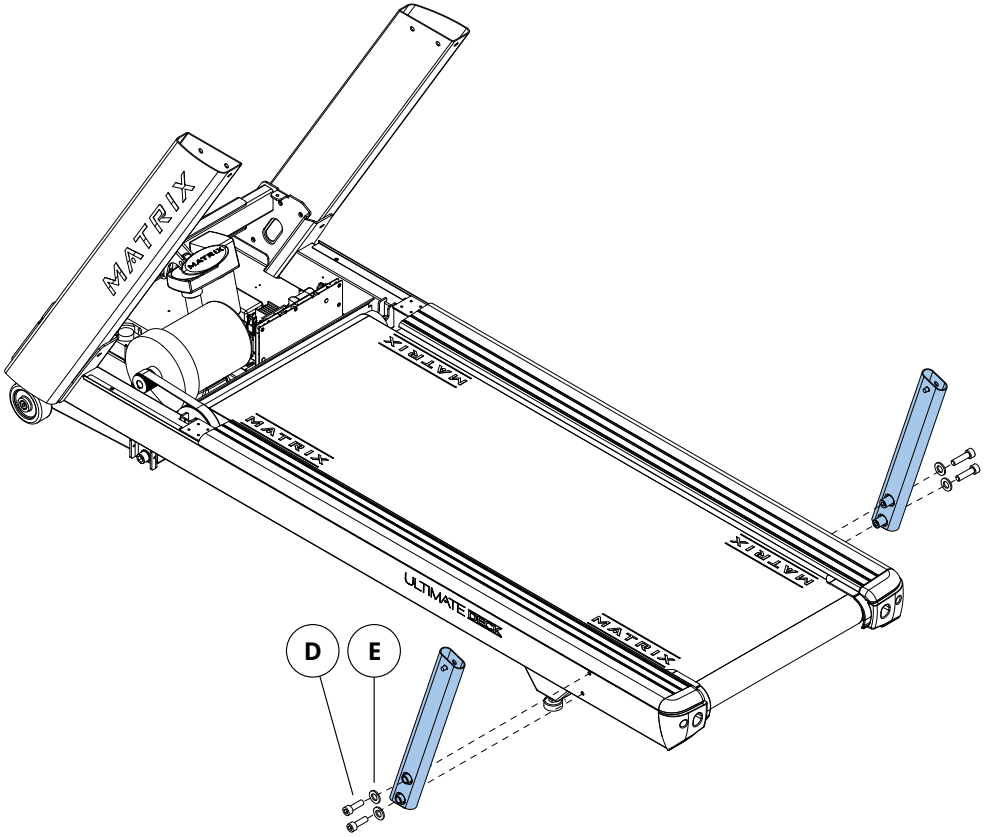

4

T3xh
T3xm

T3x
T1x

Blue Hardware Bag

	Description	Qty
F	Bolt	2
G	Flat Washer	10
H	Bolt	6
I	Bolt	4

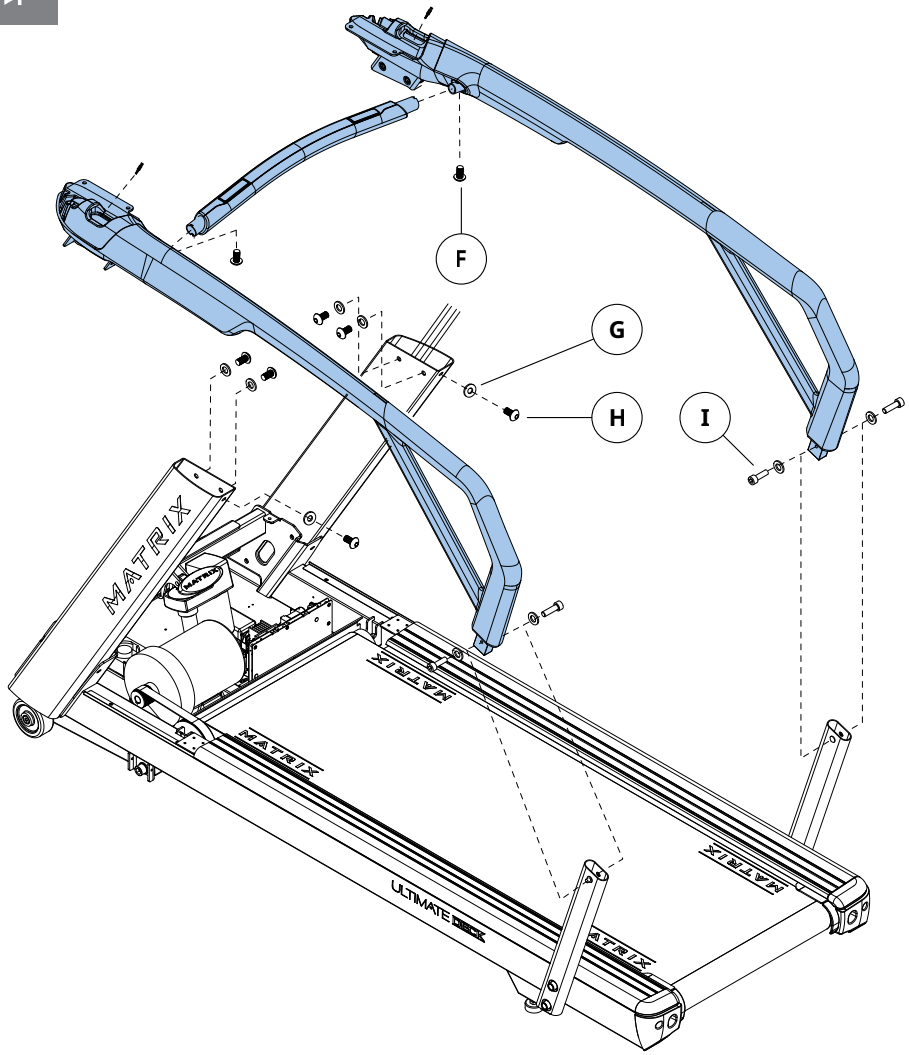

5

T3xh
T3xm

T3x
T1x

Black Hardware Bag

	Description	Qty
J	Bolt	4

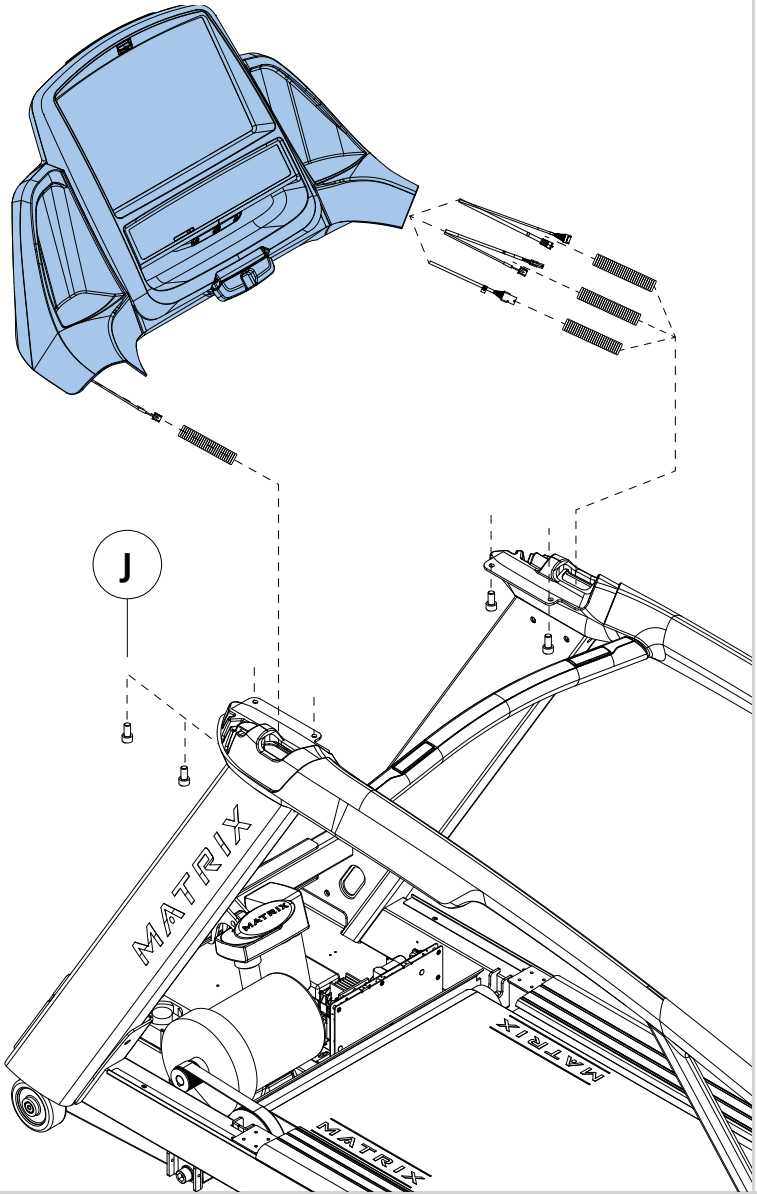

6

ALL MODELS

Pre-Installed Hardware

	Description	Qty
A	Bolt	2

ENGLISH

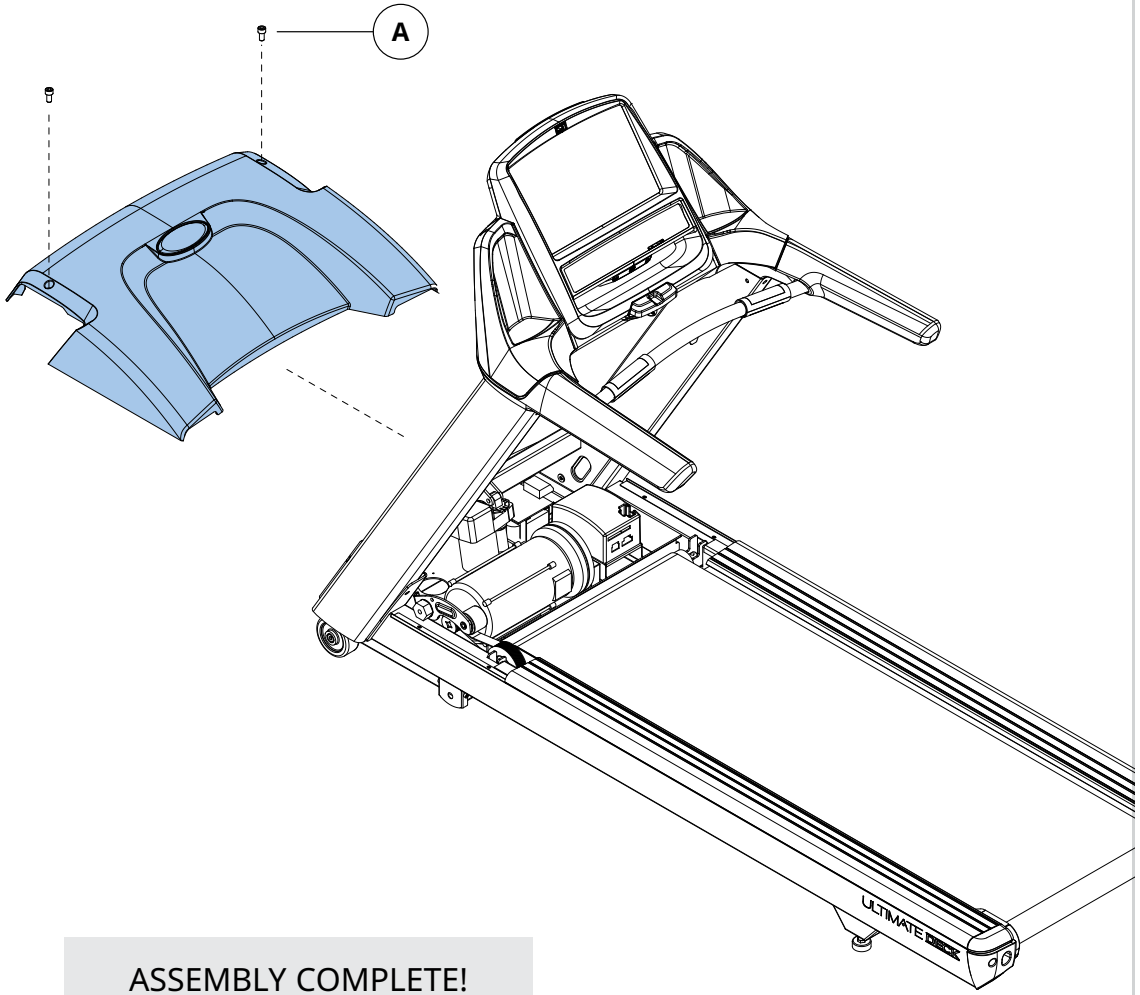

ASSEMBLY COMPLETE!

T3x shown

BEFORE YOU BEGIN

LOCATION OF THE TREADMILL

Place the equipment on a level and stable surface away from direct sunlight. The intense UV light can cause discoloration on the plastics. Locate the equipment in an area with cool temperatures and low humidity. Please leave a clear zone behind the treadmill that is at least the width of the treadmill and at least 79” (2 meters) long. This zone must be clear of any obstruction and provide the user a clear exit path from the machine. For ease of access, there should be an accessible space on both sides of the treadmill of at least 24” (0.6 meters) to allow a user access to the treadmill from either side. Do not place the treadmill in any area that will block any vent or air openings. The treadmill should not be located in a garage, covered patio, near water or outdoors. If using reverse, a clear zone of 79” (2 meters) must also be left in front of the treadmill.

TRAINING AREA

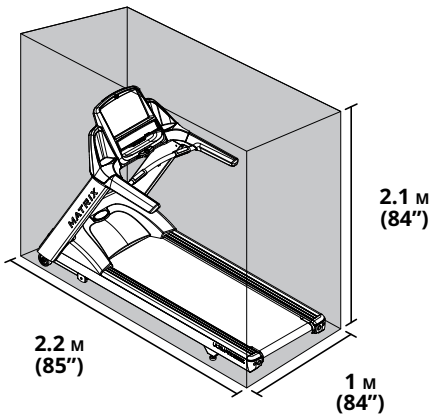

FREE AREA

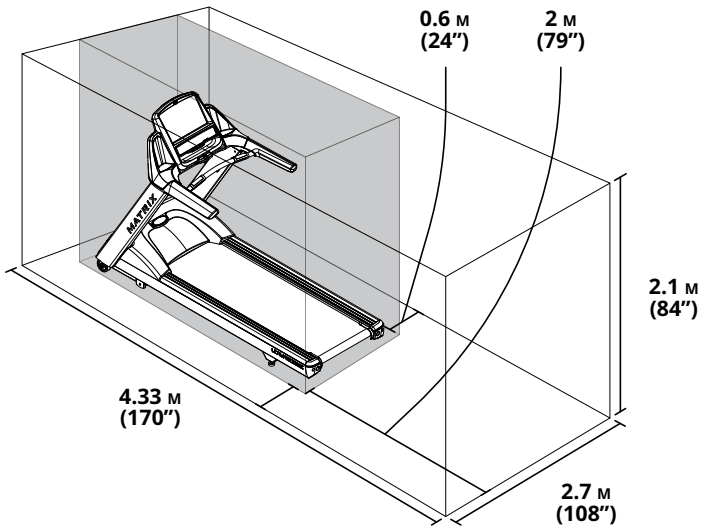

LEVELING THE TREADMILL

It is extremely important that the levelers are correctly adjusted for proper operation. Turn leveling foot clockwise to lower and counter-clockwise to raise treadmill. Adjust each side as needed until the treadmill is level. An unbalanced unit may cause belt misalignment or other issues. Use of a level is recommended.

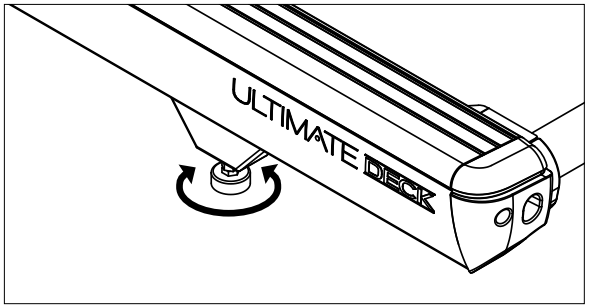

WARNING!

Our equipment is heavy, use care and additional help if necessary when moving.
Failure to follow these instructions could result in injury.

POWER

If the equipment is powered by a power supply, the power must be plugged into the power jack, which is located in the front of the equipment near the stabilizer tube. Some equipment has a power switch, located next to the power jack. Make sure it is in the ON position. Unplug cord when not in use.

WARNING!

Never operate equipment if it has a damaged cord or plug, if it is not working properly, if it has been damaged, or immersed in water. Contact Customer Tech Support for examination and repair.

TENSIONING THE RUNNING BELT

After placing the treadmill in the position it will be used, the belt must be checked for proper tension and centering. The belt might need to be adjusted after the first two hours of use. Temperature, humidity, and use cause the belt to stretch at different rates. If the belt starts to slip when a user is on it, be sure to follow the directions below.

1) Locate the two hex head bolts on the rear of the treadmill. The bolts are located at each end of the frame at the back of the treadmill. These bolts adjust the rear belt roller. Do not adjust until the treadmill is on. This will prevent over tightening of one side.
2) The belt should have equal distance on either side between the frame. If the belt is touching one side, do not start the treadmill. Turn the bolts counter clockwise approximately one full turn on each side. Manually center the belt by pushing the belt from side to side until it is parallel with the side rails. Tighten the bolts the same amount as when the user loosened them, approximately one full turn. Inspect the belt for damage.
3) Start the treadmill running belt by pressing the GO buttion. Increase speed to 3 mph (~4.8 kph) and observe the belt position. If it is moving to the right, tighten the right bolt by turning it clockwise ¼ turn, and loosen the left bolt ¼ turn. If it is moving to the left, tighten the left bolt by turning it clockwise ¼ turn and loosen the right ¼ turn. Repeat Step 3 until the belt remains centered for several minutes.
4) Check the tension of the belt. The belt should be very snug. When a person walks or runs on the belt, it should not hesitate or slip. If this occurs, tighten the belt by turning both bolts clockwise ¼ turn. Repeat if necessary.

NOTE: Use the orange strip in the lateral position of the side rails as criteria to confirm the belt is properly centered. It is necessary to adjust the belt until the edge of the belt is parallel to the orange or white strip.

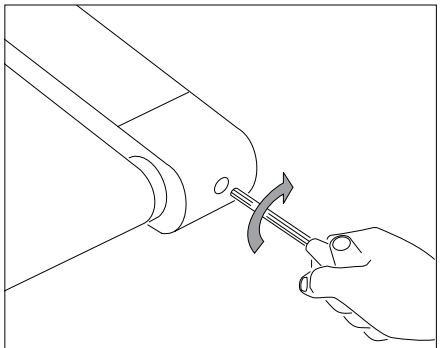

TIGHTENS RIGHT SIDE OF ROLLER

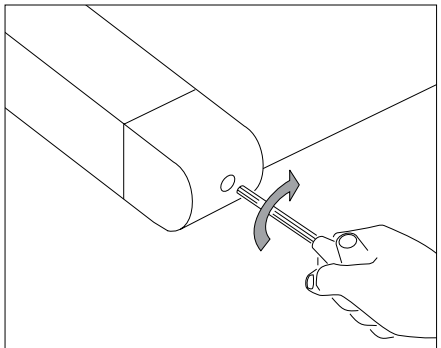

TIGHTENS LEFT SIDE OF ROLLER

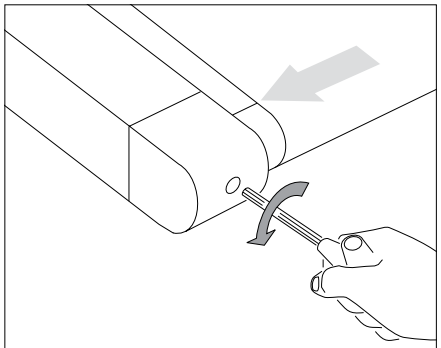

BELT IS TOO FAR TO THE RIGHT SIDE

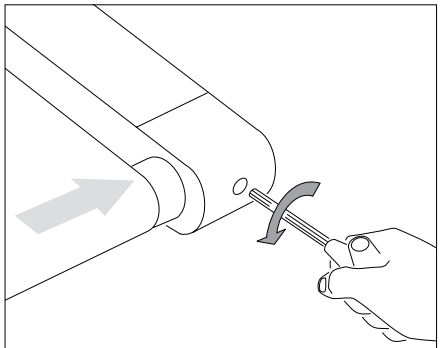

BELT IS TOO FAR TO THE LEFT SIDE

WARNING!

Do not run belt faster than 3 mph (~4.8 kph) while centering. Keep fingers, hair and clothing away from belt at all times.

Treadmills equipped with side handrails and front handlebar for user support and emergency dismount, press emergency button to stop the machine for emergency dismount.

BEFORE USING THE TREADMILL

Perform initial setup and calibrate the treadmill using the auto-calibration feature found in 'Manager Mode' or 'Engineering Mode'.

NOTES:

- DO NOT stand on the belt while the auto-calibration sequence is in progress.
- DO NOT adjust incline until the initial setup and auto-calibration are completed.
- DO NOT start the treadmill running belt or press any speed buttons until directed to while tensioning the running belt.

CAUTION!

RISK OF INJURY TO PERSONS

While you are preparing to use the treadmill, do not stand on the belt. Place your feet on the side rails before starting the treadmill. Start walking on the belt only after the belt has begun to move. Never start the treadmill at a fast running speed and attempt to jump on! In case of an emergency, place both hands on the side arm rests to hold yourself up and place your feet onto the side rails.

USING THE SAFETY KEY

Your treadmill will not start unless the emergency stop button is reset. Attach the clip end securely to your clothing. This safety key is designed to cut the power to the treadmill if you should fall. Check the operation of the safety key every 2 weeks.

WARNING!

Never use the treadmill without securing the safety key clip to your clothing. Pull on the safety key clip first to make sure it will not come off your clothing.

Only engage reverse belt direction in a supervised environment. The maximum default belt speed is 2 mph and should only be changed by an authorized technician.

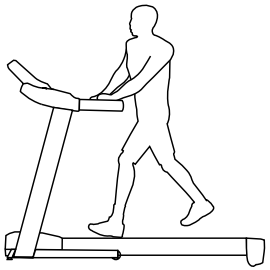

PROPER USAGE

Position your feet on the belt, bend your arms slightly and grasp the heart rate sensors (as shown). While running, your feet should be located in the center of the belt so that your hands can swing naturally and without contacting the front handlebars.

Your treadmill is capable of reaching high speeds. Always start off using a slower speed and adjust the speed in small increments to reach a higher speed level. Never leave the treadmill unattended while it is running. When not in use turn the on/off switch to off and unplug the power cord. Make sure to follow the MAINTENANCE schedule in this guide to maintain optimal performance and prevent premature electronic failure. Keep your body and head facing forward. Do not attempt to turn around or look backwards while the treadmill is running. Stop your workout immediately if you feel pain, faint, dizzy or are short of breath.

USING THE HEART RATE FUNCTION

The heart rate function on this product is not a medical device. While heart rate grips can provide a relative estimation of your actual heart rate, they should not be relied on when accurate readings are necessary. Some people, including those in a cardiac rehab program, may benefit from using an alternate heart rate monitoring system like a chest or wrist strap. Various factors, including movement of the user, may affect the accuracy of your heart rate reading. The heart rate reading is intended only as an exercise aid in determining heart rate trends in general. Please consult your physician.

PULSE GRIPS

Place the palm of your hands directly on the grip pulse handlebars. Both hands must grip the bars for your heart rate to register. It takes 5 consecutive heart beats (15-20 seconds) for your heart rate to register. When gripping the pulse handlebars, do not grip tightly. Holding the grips tightly may elevate your blood pressure. Keep a loose, cupping hold. You may experience an erratic readout if consistently holding the grip pulse handlebars. Make sure to clean the pulse sensors to ensure proper contact can be maintained.

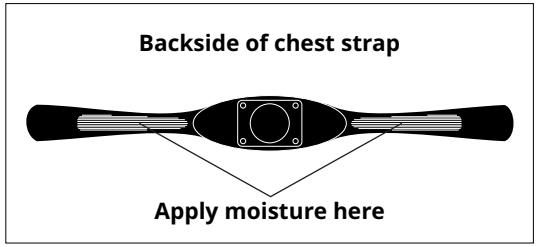

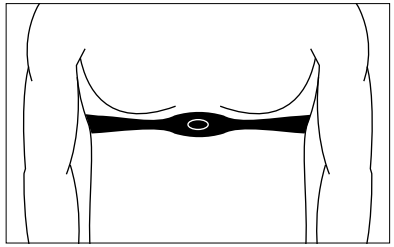

WIRELESS HEART RATE RECEIVER

When used in conjunction with a **wireless chest transmitter**, your heart rate can be transmitted wirelessly to the unit and displayed on the console.

Prior to wearing the wireless chest transmitter on your chest, moisten the two rubber electrodes with water. Center the chest strap just below the breast or pectoral muscles, directly over your sternum, with the logo facing out. NOTE: The chest strap must be tight and properly placed to receive an accurate and consistent readout. If the chest strap is too loose, or positioned improperly, you may receive an erratic or inconsistent heart rate readout.

WARNING!

Heart rate monitoring systems may be inaccurate. Over exercising may result in serious injury or death. If you feel faint, stop exercising immediately.

MAINTENANCE

1. Any and all part removal or replacement must be performed by a qualified service technician.
2. DO NOT use any equipment that is damaged and or has worn or broken parts. Use only replacement parts supplied by your country's local MATRIX dealer.
3. MAINTAIN LABELS AND NAMEPLATES: Do not remove labels for any reason. They contain important information. If unreadable or missing, contact your MATRIX dealer for a replacement.
4. MAINTAIN ALL EQUIPMENT: Preventative maintenance is the key to smooth operating equipment as well as keeping your liability to a minimum. Equipment needs to be inspected at regular intervals.
5. Ensure that any person(s) making adjustments or performing maintenance or repair of any kind is qualified to do so. MATRIX dealers will provide service and maintenance training at our corporate facility upon request.

WARNING

To remove power from the Treadmill, the power cord must be disconnected from the wall outlet.

RECOMMENDED CLEANING TIPS

Preventative maintenance and daily cleaning will prolong the life and look of your equipment.

A Use a soft, clean cotton cloth. DO NOT use paper towels to clean surfaces on the treadmill. Paper towels are abrasive and can damage surfaces.

B Use a mild soap and damp cloth. DO NOT use ammonia based cleaner or alcohol. This will cause discoloring of the aluminum and plastics it comes into contact with.

C Do not pour water or cleaning solutions on any surface. This could cause electrocution.

D Wipe the console, heart rate grip, handles and side rails after each use.

E Brush away any wax deposits from the deck and belt area. This is a common occurrence until the wax is worked into the belt material.

F Be sure to remove any obstructions from the path of the elevation wheels including power cords.

G For cleaning touch screen displays, use distilled water in an atomizer spray bottle. Spray distilled water onto soft, clean, dry cloth and wipe display until clean and dry. For very dirty displays, adding vinegar is recommended.

CAUTION: Be sure to have proper assistance to install and move the unit in order to avoid injury or damage to the treadmill.

MAINTENANCE SCHEDULE

ACTION	FREQUENCY
Unplug the unit. Clean entire machine using water and a mild soap or other Matrix approved solution (cleaning agents should be alcohol and ammonia free).	DAILY
Inspect the power cord. If the power cord is damaged, contact Customer Tech Support.	DAILY
Make sure the power cord is not underneath the unit or in any other area where it can become pinched or cut during storage or use.	DAILY
Unplug the treadmill and remove the motor cover. Check for debris and clean with a dry cloth or small vacuum nozzle. **WARNING**: Do not plug the treadmill in until the motor cover has been reinstalled.	MONTHLY
For touch screen consoles, enter service mode and select 'test'. Select 'touch calibration' and then select 'start'. Follow the on-screen prompts and touch the screen where indicated.	QUARTERLY
T3xh & T3xm only: Clean IR sensors (located on console masts) with a cotton swab and rubbing alcohol.	QUARTERLY

DECK AND BELT REPLACEMENT

One of the most common wear and tear items on a treadmill is the deck and belt combination. If these two items are not properly maintained they can cause damage to other components. This product has been provided with the most advanced maintenance free lubricating system on the market.

WARNING: Do not run the treadmill while cleaning the belt and deck. This can cause serious injury and can damage the machine.

Maintain the belt and deck by wiping the sides of the belt and deck with a clean cloth. The user can also wipe under the belt 2 inches (~51mm) on both sides removing any dust or debris.

The deck can be flipped and reinstalled or replaced by an authorized service technician. Please contact Matrix Fitness Systems for more information.

PRODUCT SPECIFICATIONS

	T3xe	T3xh	T3xm	T3x	T1xe	T1x
Max User Weight	182 kg / 400 lbs				158.8 kg / 350 lbs	
Product Weight	181 kg / 399 lbs			180 kg / 397 lbs	153.8 kg / 338 lbs	152.8 kg / 336 lbs
Shipping Weight	200 kg / 440 lbs			199 kg / 437 lbs	172.3 kg / 379 lbs	171.5 kg / 377 lbs
Overall Dimensions (L x W x H)*	215 x 93 x 161 cm / 84.6” x 36.5” x 63.5”				214.9 x 86.4 x 132.1 cm / 84.6” x 34” x 52”	
Electrical Receptacle & Plug	NEMA 5-20R/P 110 V or NEMA 6-20R/P 220 V					
Electrical Requirements	20 A dedicated circuit required-non-looped-grounded					

* Ensure a minimum clearance width of 0.6 meters (24”) for access to and passage around MATRIX equipment. Please note, 0.91 meters (36”) is the ADA recommended clearance width for individuals in wheelchairs.

MATRIX

© 2017 Johnson Health Tech
Part # 1000402127
Rev 1.2 A